Residential Decks

Permit and Construction Guidelines
under the 2009 IRC

Produced by TimberTek Consulting

This publication is endorsed by:

Johnson County Building Officials Association

Published by:

Johnson County Contractor Licensing Program

USES AND LIMITATIONS OF THIS DOCUMENT

The purpose of this document is to provide the public, contractors, homeowners and city officials with deck construction guidelines that will be accepted by the majority of jurisdictions within the Johnson County and Kansas City metropolitan area. Members of the Johnson County Building Officials have agreed that the guidelines contained in this document provide construction principles and practices that if followed will satisfy the general permit and construction requirements in their jurisdictions. The prescriptive construction methods recommended in this guideline meet or exceed minimum requirements of the *2009 International Residential Code*.

This guideline does not contain all of the local jurisdiction requirements for obtaining permits, fees, or procedures for inspection. The guideline also does not prevent the local jurisdiction from asking for additional information or varying from specific requirements based on locally adopted code and ordinance requirements. This guide is not intended to preclude the use of other construction methods and materials which may be approved by the authority having jurisdiction. Prior to beginning any new construction, additions or maintenance work on decks, consult with your local jurisdiction to verify that use of this guideline is acceptable and to familiarize yourself with their specific permit application, plan review and inspection procedures.

This guideline is limited to deck designs using a uniform floor loading of 40 pounds per square foot live load and 10 pounds per square foot dead load over the entire floor of the deck. Decks supporting loads in excess of the standard uniform loads will require specific approval from the local jurisdiction and may require design by licensed architects or engineers. Decks supporting roofs, hot tubs, spas, sun rooms, etc., and decks with cantilevers exceeding 3 feet are examples of deck design elements that are not covered by this guideline and will require additional direction from the local jurisdiction.

Where deck ledgers are attached to the dwelling the assumed attachment is over hardboard siding with connection through to the rim joist of the house. Where the exterior consists of other siding materials (stucco, shingles, asbestos siding, etc.) or attachment of the ledger is to brick, concrete, stone or other materials consult with your local jurisdiction for acceptable attachment methods.

This is a living document and is subject to change from time to time as codes or other requirements change.

Second Edition
September 2009

Residential Decks
Permit and Construction Guidelines

Builders and homeowners are required to obtain a permit prior to constructing, altering or replacing a deck.

Plan Submittals

The following information shall be submitted to the building department for their review in order to obtain a deck permit. All of the information shown on the sample documents should be contained in all plan submittals. Additional information may be necessary. Plan review fees and permit fees will vary from one jurisdiction to another.

The first requirement is submittal of a **Site Plan,** drawn to scale, for the property where the deck is to be built. Please provide all the information shown on the sample.

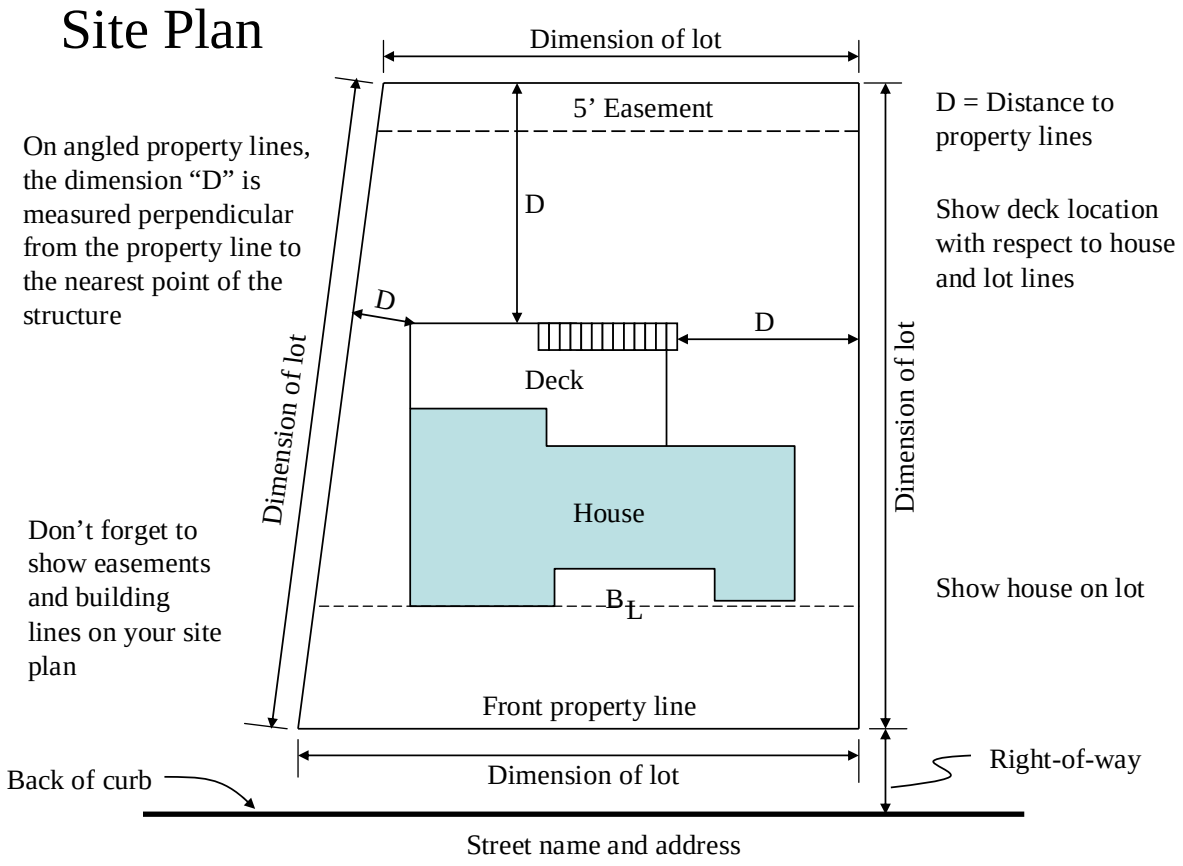

Figure 1

All lot dimensions shall be shown on the Site Plan. The distances to property lines must meet any side and rear yard setback requirements. This Site Plan may be drawn by the builder or the homeowner and does not have to be sealed by a design professional.

The second requirement in obtaining a permit is the submittal of a **Deck Plan** drawn to scale. This plan should contain as much information as possible about the deck and its construction. The information shown on the sample Deck Plan is the minimal requirement for the plan review process. Additional information may be required by the building department in order to complete their review. This plan may also be drawn by the builder or the homeowner and does not require the seal of a design professional. Some designs and construction methods may, however, require the use of an architect, engineer or other design professional.

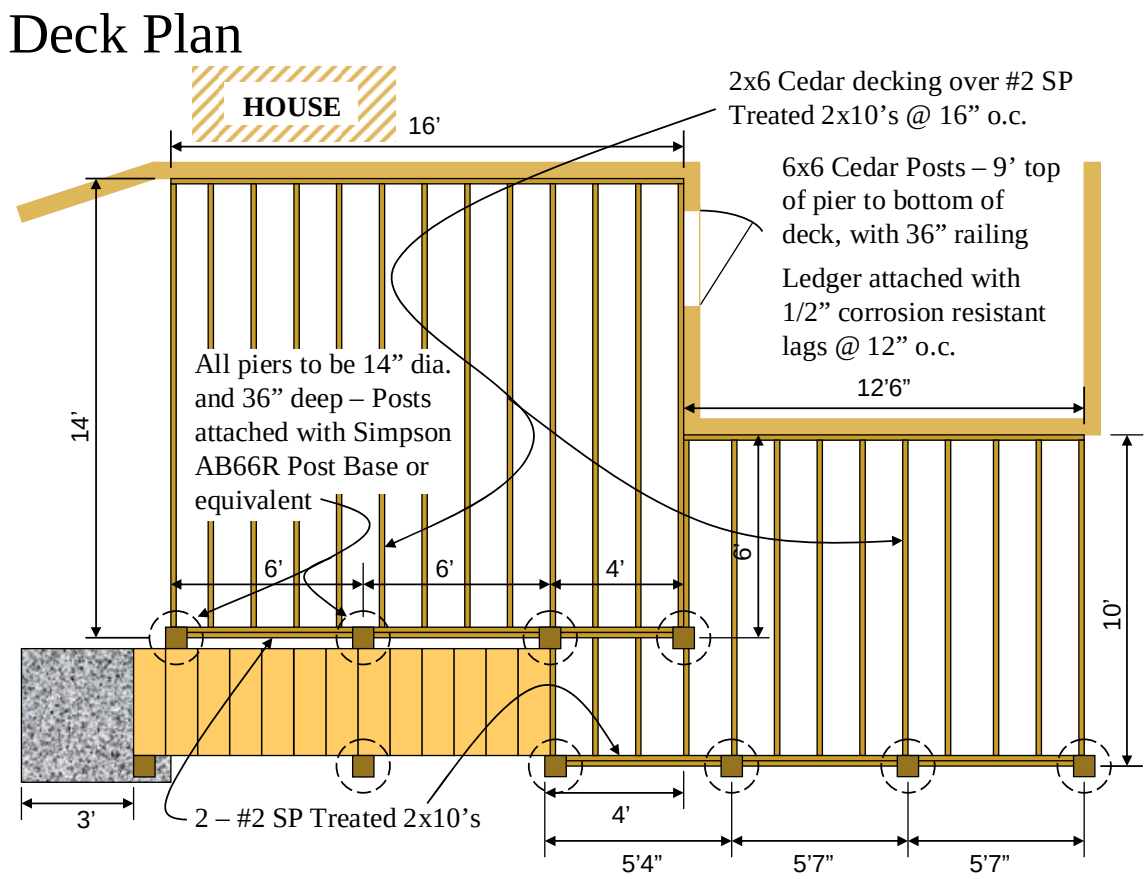

Figure 2

The specific construction information shown on the sample Deck Plan can be found in the tables and diagrams that are provided with this document. Refer to the tables for specific requirements for designing joists, beams, posts, deck piers and connecting the deck to the house. The stair stringers must also be cut and connected properly and must not exceed the spans specified for safety reasons. The information contained in this document should not be considered a complete list of code requirements.

A variety of decking materials may be used for the flooring and railings. Please specify the size and type of material

Spans for decking material

Decking – 300# Concentrated Load		
Member	**Species/grade**	**Max. span**
2x6	SP #2 ACQ	2'-6"
2x6	Cedar #2	2'-0"
5/4x6	SP #2 ACQ	2'-0"
5/4x6	Cedar #2	1'-4"
5/4x6	Composite	1'-4"

Table 1

and the framing direction, such as '5/4 Radius Edge Cedar Decking running at a 45 degree angle to the floor joists.' This is important because certain products like Radius Edge Decking have limited span capabilities as shown in Table 1.

The deck must be constructed of either a naturally decay-resistant lumber or a preservative treated lumber, and be designed to support a live load of 40 psf. All overhead power lines must be located at least 10 feet above the deck floor or be at least 3 feet horizontally away from the floor surface. An exterior light for the deck and lighting on the stairs is required.

Columns and Piers

The size of the wood columns and concrete piers that are required to support a deck is based on the square footage of deck being supported by that column and pier. This square footage can be determined by using Figure 3 as an example. A column and pier supports an area of deck that is half way to the next support in any direction. The house is considered a support. In Figure 3 below, the interior post supports half the joist span going back to the house and half the joist span going toward the outside edge of the deck. Since each set of joists span 8 feet, the post and pier supports 4 feet of the span in each direction. That means the interior post and pier is carrying a total of 8 feet parallel to the joists.

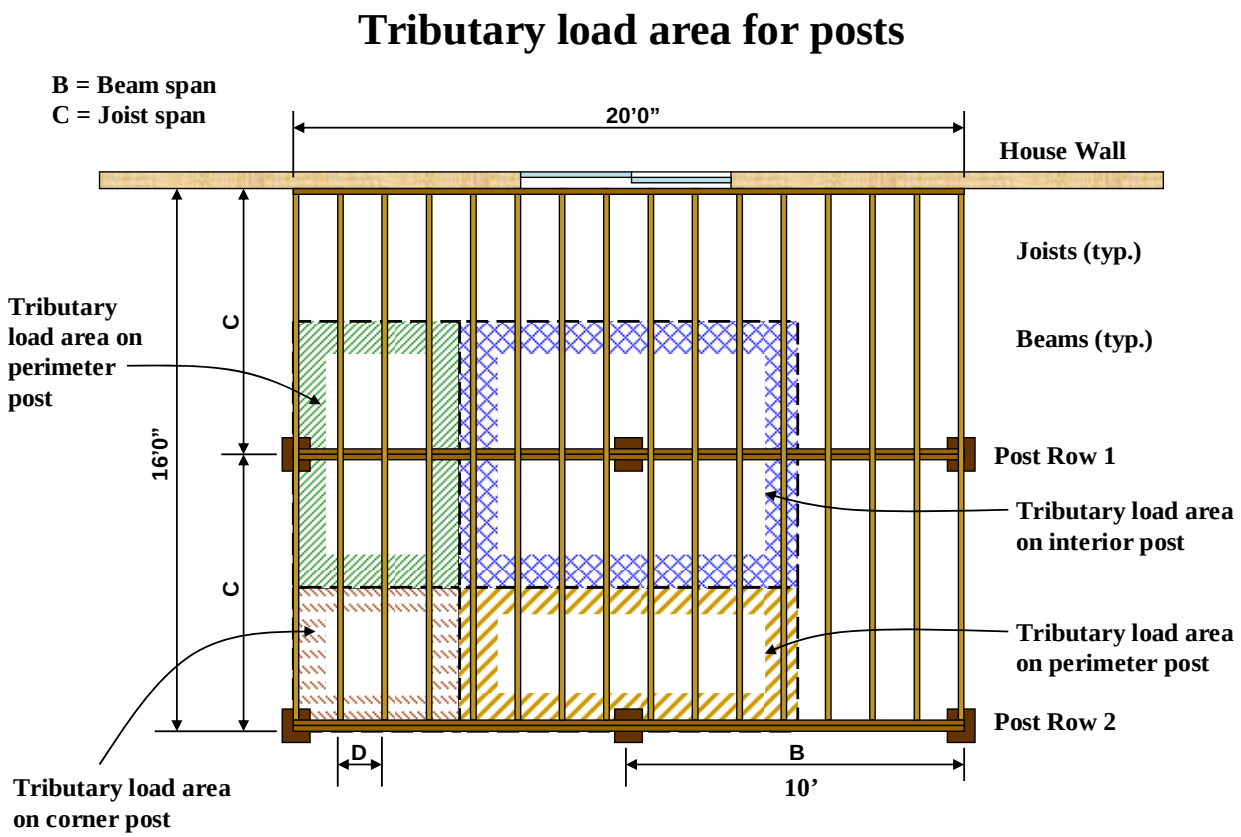

Figure 3

We then determine the distance between posts and piers parallel to the beam. Since the posts are set 10 feet apart in this diagram, the interior post and pier supports 5 feet in both directions for a total of 10 feet along the length of the beam. These two dimensions then give us an area of

80 square feet of deck supported by the interior post. The perimeter posts carry half the area the interior post carries, or 40 square feet, and the corner posts carry half the area of the perimeter posts, or 20 square feet. Now the size of the columns and the piers can be determined using Tables 2 and 3.

Table 2 on the right shows the size of post that is required to support a specified area of deck and the height that post may be. The maximum post height is measured from the top of the concrete pier to the bottom of the beam the post supports. This same post may continue on up to provide support for the guardrail around the deck, but that additional length is not counted as part of the maximum post height.

Maximum post heights for 40 lb/ft^2 deck design

Species	Post size	40 lb/ft^2 live load – 10 lb/ft^2 dead load Tributary load area to post (ft^2)													
		36	48	60	72	84	96	108	120	132	144	156	168	180	192
Southern pine	4x4	10’	10’	10’	9’	9’	8’	8’	7’	7’	6’	6’	6’	6’	5’
	4x6	14’	14’	13’	12’	11’	10’	10’	9’	9’	8’	8’	8’	7’	7’
	6x6 (No. 1)	17’	17’	17’	17’	17’	17’	17’	17’	17’	17’	17’	17’	16’	16’
	6x6 (No. 2)	17’	17’	17’	17’	17’	17’	17’	17’	16’	16’	15’	14’	13’	13’
Redwood Western Red Cedar	4x4	10’	10’	9’	8’	7’	7’	6’	6’	5’	4’				
	4x6	14’	13’	12’	11’	10’	9’	8’	8’	7’	7’	7’	6’	6’	5’
	6x6 (No. 1)	17’	17’	17’	17’	17’	17’	17’	17’	16’	15’	15’	14’	14’	13’
	6x6 (No. 2)	17’	17’	17’	17’	17’	16’	13’	7’						

Table 2

To use the table, simply find the square footage of deck being supported by the post, and match it with the species and size of the post to find the maximum height of that particular column.

Footing for use in ground frost areas

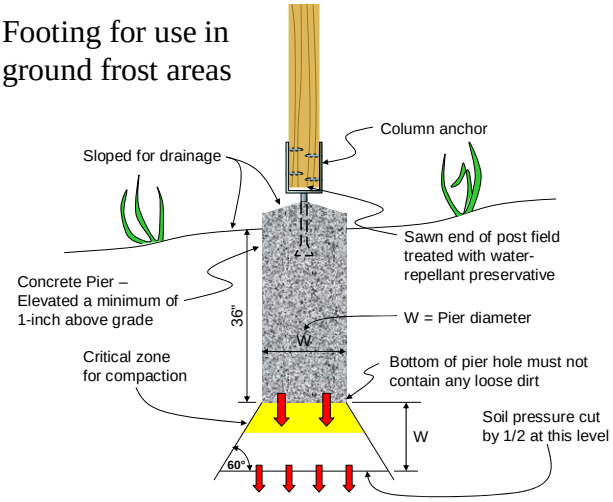

Figure 4

A critical part of the deck construction is the concrete pier that supports each post. If they are too small the deck could settle over time and become uneven. To use Table 3, select the square footage of deck supported by the pier. This is the same area that was just used for the post sitting on the pier. Based on the square footage being supported, select the diameter of the pier required. Remember that all piers are to be a minimum of 36 inches deep to go below the frost line. At least 1-inch of the pier should be elevated above grade with the top sloped for drainage.

Pier sizes can be chosen individually, based on the square footage of deck supported by each pier. That would mean each pier might require a different diameter hole. An easier way is to determine the largest diameter hole required and make all the holes that size. This method will, however, require more concrete. Which ever way it is done, this information must be shown on the Deck Plan.

Once the post and pier sizes are determined, a connection must be made between the post and the pier. This connection must resist lateral movement as well as uplift. **That means a column anchor must be used to attach the post to the pier.** A ‘drift pin’ simply drilled into the bottom

of the post is not sufficient. Neither is a lag screwed part way into the bottom of a post with the remainder cast into a concrete pier. The sample plan states a Simpson AB66R Post Base or equivalent is being used to anchor the post to the pier. Be sure to specify some type of column anchor on the plans. Column anchors are made to fit 4x4 or 6x6 posts. Some column anchors are designed to be set directly in the concrete when it is poured. Others can be drilled into the concrete later so they can be placed exactly where they need to go after the concrete has set up. Wedge anchors are recommended for these applications.

Pier sizes based on deck area supported

Pier diameter	Square footage of deck that can be supported
8”	14
10”	20
12”	32
14”	40
16”	56
18”	72
20”	88
22”	104
24”	126

Based on 2000 psf allowable soil bearing capacity

Table 3

Ledger to House Connection

Decks are usually supported on one side by a ledger attached to the house. This ledger attachment is critical to insure the deck is safely and securely supported at this point. When the ledger is attached to the house, there are very specific requirements that must be met. Follow the diagrams closely for the proper attachment of the ledger.

The deck ledger shall *not* be nailed to the house. It must be lagged or bolted to the rim joist of the house which in turn must be securely attached to the framing of the structure and sitting on the foundation wall. Use Table 4 to determine the proper attachment of the deck ledger to the rim joist of the house. The house rim joist may be either a 2x or a 1-1/4" LSL rim for I-joists.

Required size and spacing of corrosion resistant lag screws for attaching deck ledger to house for a given joist span

On-center spacing of lag screws (inches)					
Lag size	**Joist span (feet)**				
1/2” dia. Lag	0 – 5 ft	6 – 7 ft	8 – 10 ft	11 – 14 ft	15 – 18 ft
	32” o.c.	24” o.c.	16” o.c.	12” o.c.	8” o.c.
Equivalent spacing joists @ 16” o.c.	**Every other joist space**	**Two every third joist space**	**Each joist space**	**Each joist space with two every other space**	**Two in each joist space**
3/8” dia. Lag	0 – 4 ft	5 – 6 ft	7 – 8 ft	9 – 12 ft	13 – 18 ft
	24” o.c.	16” o.c.	12” o.c.	8” o.c.	6” o.c.
Equivalent spacing joists @ 16” o.c.	**Two every third joist space**	**Each joist space**	**Each joist space with two every other space**	**Two in each joist space**	**Two each joist space with three every other space**

Table 4

The size and spacing of the lag screws is based on their capacity. Lag screw values are assumed to be 340 pounds for 1/2-inch lag screws and 250 pounds for 3/8-inch lag screws. The span of

the floor joists determines how much load is being transferred to the ledger and thus to the lag screws. Use Table 4 by picking a lag screw size and then find the span of the floor joists. Under the span will be the required on-center spacing of the lag screws. Since some lag screw spacing will interfere with the framing layout, an equivalent spacing is also provided that may be used in lieu of the specified on-center spacing when the joists are laid out at 16” o.c.

Proprietary fasteners such as Ledgerlok®, or any other brand of similar fasteners, may be used in lieu of 3/8-inch lag screws. See Table 4 for spacing requirements.

Pilot holes shall be drilled for lag screws 1/2 inch or larger. The clearance hole for the shank shall have the same diameter as the shank. The lead hole for the threaded portion shall have a diameter equal to 60% to 75% of the shank diameter. Pilot holes shall not be drilled for 3/8 inch or smaller lag screws. All lags and nails used to connect framing members will be placed at least 2 inches from the ends and edges of the lumber as shown in Figure 5. Do not drive lag screws with a hammer.

The use of lag screws, along with all the other metal connectors used to build a deck, brings us to a very important point. The use of proper fasteners and connections with treated lumber is critical to the overall performance of the structure. Standard carbon-steel nails and fasteners will rust and corrode with time, causing unsightly stains and possibly an eventual failure to hold securely. Therefore, the lag screws or wedge anchors supporting the ledger, and all other connectors used in constructing a deck such as joist hangers and hold downs, must be hot dipped galvanized or stainless steel. Electroplated fasteners are *not* recommended for use with treated lumber. Since ACQ and CA treated wood will corrode standard carbon-steel and aluminum, it is of extreme importance that all the connectors and flashings used in deck construction be able to withstand direct contact with these materials. The new µCA-C treatment which is a dispersed copper or micronized version is less corrosive than its predecessor. It still requires the use of hot dipped galvanized and G185 galvanized steel fasteners in lieu of standard carbon-steel fasteners, but it does allow the use of aluminum flashings. Check with your supplier to be sure you are getting the proper corrosion resistance on all connecting hardware, such as joist hangers and column anchors as well as lag screws, deck screws and nails.

Deck ledger attachment to house

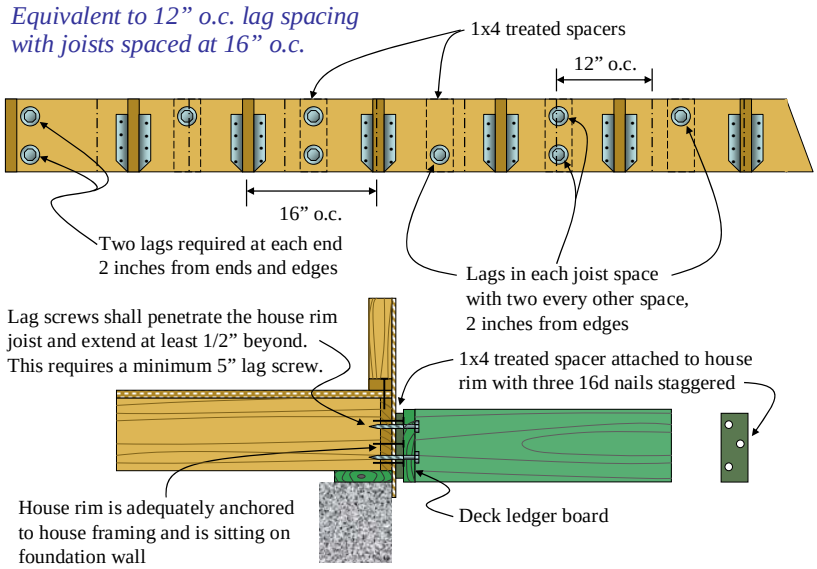

Figure 5

Figure 5 describes the equivalent spacing of lag screws when joists are spaced at 16” o.c. This equivalent spacing described in Table 4 may be used in lieu of the on-center spacing listed.

Many individuals have attached ledgers directly against hardboard siding. This will lead to the eventual deterioration of the siding. Therefore, a 1x4 treated spacer shall be placed between the siding and the ledger board to allow for

water drainage and for air to get to the siding so it can stay dry.

The attachment of the 1x4 is made using three 16d hot dipped galvanized nails in a staggered pattern, nailed through the siding and into the rim joist of the house. The lag screws must then go through the 1x4 and into the house rim joist. Note that this attachment requires the lag screw to penetrate the house rim joist and extend at least 1/2" beyond on the inside. That means this connection requires a minimum 5” galvanized lag screw with a standard galvanized washer. Donut type spacers shall not be used unless they are not more than 1/2" thick.

Some builders or homeowners may want to remove the siding and attach the ledger directly to the rim joist of the house. This requires very close attention to flashing details so water cannot get to the house rim and cause structural damage to it and possibly even the ends of the floor joists. Figure 6 shows that proper flashing extends at least 6 inches up behind the siding and housewrap. The flashing should then extend down past the ledger board and end with a drip-edge at the bottom. To avoid deterioration, the flashing should be galvanized steel, or copper. Aluminum may now be used with the new µCA-C treatment. Holes drilled for the lag screws should be caulked before the ledger is applied to prevent water from entering the main structure of the house. Galvanized or stainless steel washer spacers assure drying of the 2x ledger. Double flashing over the top of the ledger is also a good practice.

The house rim joist must be securely anchored to the house framing and it must be sitting on the foundation wall.

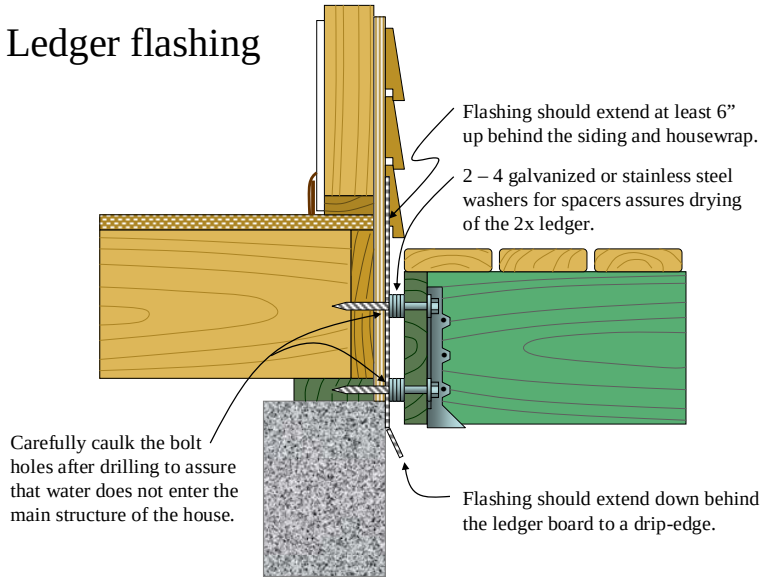

Figure 6

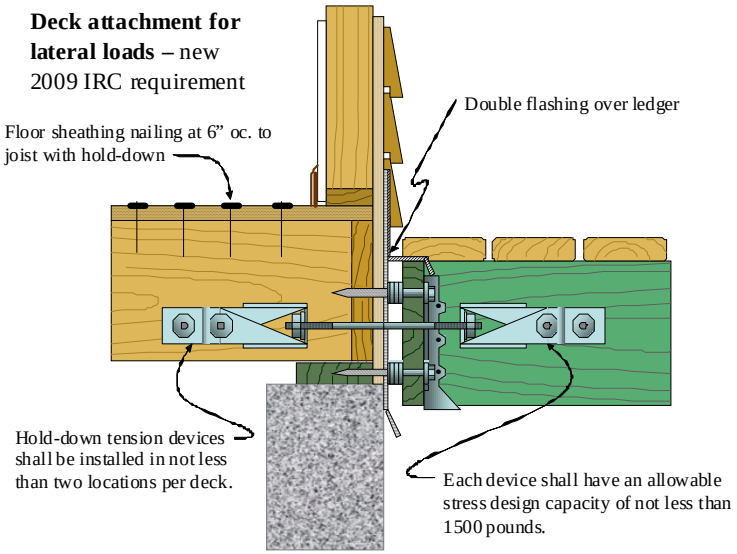

Figure 7

Deck lateral load connection.

The 2009 IRC now requires that decks shall be attached to buildings with hold-down tension devices installed in not less than two locations per deck. Each of these devices shall have an allowable stress design capacity of not less than 1500 pounds. The hold-down tension device shown in Figure 7 is a Simpson HD2A. USP and other manufactures make similar hold-down devices that would also work for this application.

Ledger attachment to open web floor trusses.

Attaching a ledger to open web floor trusses requires attention to details. The ledger must be attached to the vertical ends of the floor truss member since there is nothing between the floor trusses to attach the ledger to. Finding the location and spacing of the trusses is very important. Use the following tables to determine how to attach the deck ledger board to floor trusses.

Attaching deck ledger to floor trusses

Trusses spaced 16” o.c.			
Deck joist span	**1/2" Lags per truss**	**Deck joist span**	**LedgerLok® or 3/8” lags per truss**
0 – 5 ft	1 every other truss	0 – 4 ft	1 every truss
6 – 7 ft	1 every truss	5 – 6 ft	1 every truss
8 – 10 ft	1 every truss	7 – 8 ft	1 every truss 2 every other truss
11 – 14 ft	1 every truss 2 every other truss	9 – 12 ft	2 every truss
15 – 18 ft	2 every truss	13 – 18 ft	2 every truss 3 every other truss

Table 5

Trusses spaced 24” o.c.			
Deck joist span	**1/2" Lags per truss**	**Deck joist span**	**LedgerLok® or 3/8” lags per truss**
0 – 5 ft	1 every truss	0 – 4 ft	1 every truss
6 – 7 ft	1 every truss	5 – 6 ft	1 every truss 2 every other truss
8 – 10 ft	1 every truss 2 every other truss	7 – 8 ft	2 every truss
11 – 14 ft	2 every truss	9 – 12 ft	2 every truss 3 every other truss
15 – 18 ft	2 every truss 3 every other truss	13 – 18 ft	3 every truss

Table 6

Deck ledger attachment to concrete

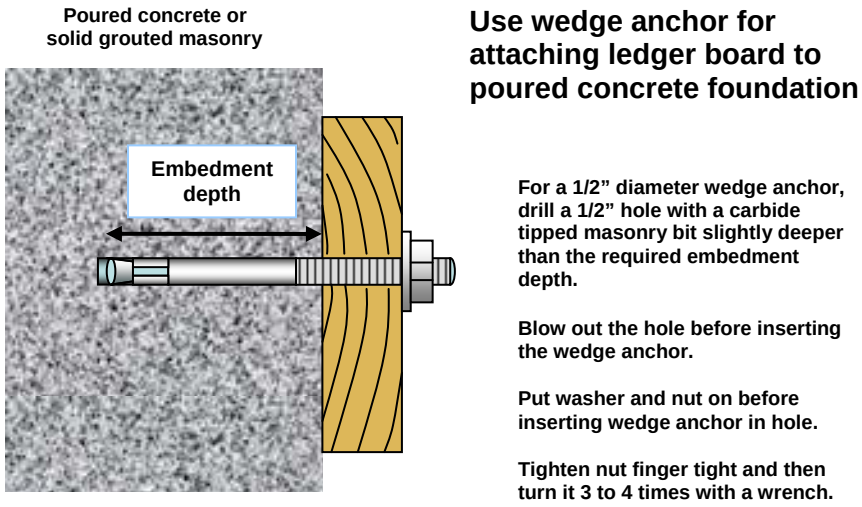

Standard is 10 anchor diameters for spacing between anchors and 5 anchor diameters from any unsupported edge.

Figure 8

Deck ledgers attached to poured concrete walls.
When this scenario comes up, then wedge anchors shall be used to attach the ledger board to the concrete wall. See Figure 8. For a 1/2" diameter wedge anchor, drill a 1/2" hole slightly deeper than the embedment depth, which is four-inches for this size anchor, and then blow out the dust. Put the washer and nut on before inserting the wedge anchor into the hole. This protects the threads. Tap it in with a hammer and then tighten the nut finger tight. After that, turn it about three to four times with a wrench. Be sure that the wedge anchors are spaced a minimum of ten anchor diameters and that they are five anchor diameters from an unsupported edge.

Required size and spacing of hot-dipped galvanized wedge anchors for attaching deck ledger to poured concrete for a given joist span

On-center spacing of wedge anchors (inches)			
Wedge anchor size	**Joist span (feet)**		
1/2" dia.	0 – 7 ft	8 – 14 ft	15 – 18 ft
	32" o.c.	24" o.c.	16" o.c.
3/8" dia.	0 – 6 ft	7 – 12 ft	13 – 18 ft
	24" o.c.	16" o.c.	12" o.c.

1/2" wedge anchors shall have an embedment depth of 4"
3/8" wedge anchors shall have an embedment depth of 3"

Thickness of material to be fastened, plus the embedment depth, plus the thickness of the nut and washer equals minimum wedge anchor length.

The forces on a Wedge Anchor are transferred to the base material in which it is installed. If the anchors are installed too close together, it can cause an interaction of the forces, thus reducing the holding power of the anchor. As a rule of thumb, the expansion industry has established a minimum standard of ten (10) anchor diameters for spacing between anchors and five (5) anchor diameters from any unsupported edge. When vibration or sudden impact are part of the load conditions, spacing between anchors should be increased.

Table 7

Deck ledgers shall not be attached to or through exterior veneers such as brick, masonry or stone.

These veneers are non-structural and will not support the vertical or lateral loads imposed by the deck on the exterior wall of the structure. Even attaching through the veneer to the wood framing behind is not acceptable because the connector is now cantilevered and is not designed to support such loads in this type of an application. The connectors supporting the deck shall not be cantilevered more than one-half-inch.

Deck ledger shall not be attached to a cantilevered portion of the building.

Ledgers shall not be attached to cantilevers unless the connection is engineered or the following prescriptive method is followed. Note there are limitations imposed on this prescriptive method. Be sure to follow all the details very closely.

Prescriptive method for attaching a ledger to a cantilever

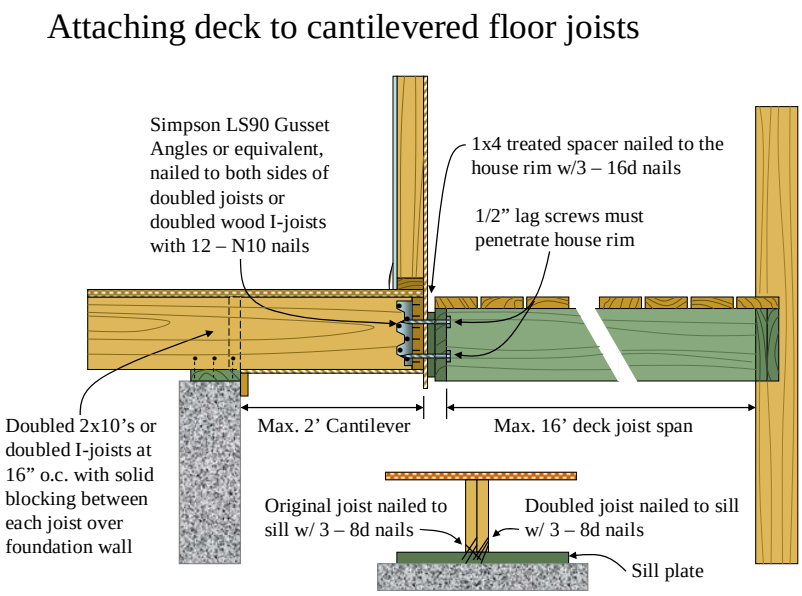

Figure 9

In order to attach a deck to a cantilevered portion of a house, it is critical that the rim joist be able to carry the added load of the deck in addition to the weight of the exterior wall which is already sitting on it. Since the rim joist is only nailed into the ends of the floor joists, that connection is not sufficient to support the extra load imposed on it by the deck. This is especially true with wood-I joists which only have two nails connecting the rim to each wood-I.

The first requirement for attaching a deck to a cantilever is the house joists must be 2x10's or wood-I joists spaced at 16 inches on-center. Each 2x10 joist must then be doubled with an additional 6 foot No. 3, Doug Fir, 2x10 nailed together with 10d common nails at 16 inches on-center staggered.

Wood-I joists must also be doubled with 30-inch long web stiffeners added. The web stiffeners shall be placed between the I-joists and on the outside flanges of each of the two I-joists and nailed together with a row of 4 – 10d nails every 16 inches. The original joists and the added joists will each be toe-nailed to the sill plate with 3 – 8d nails. Solid blocking between the 2x10 joists or wood-I's shall be provided over the foundation wall.

The next thing that must be done is to attach the rim joist to the doubled floor joists with Simpson LS90 gusset angles or their equivalent. These angles are designed to transfer the load imposed on the rim by the deck back into the doubled joists. Each of these gusset angles shall be nailed on with 12 – N10 nails, six nails into the rim and the other six into the doubled joists.

The maximum deck joist span for this application is 16 feet. This maximum span would require two 1/2-inch lag screws between each deck joist if they are laid out at 16 inches on-center. Figures 9 and 10 show elevation and plan views detailing how a deck ledger shall be attached to a cantilevered floor system.

Attaching deck to cantilevered floor joists

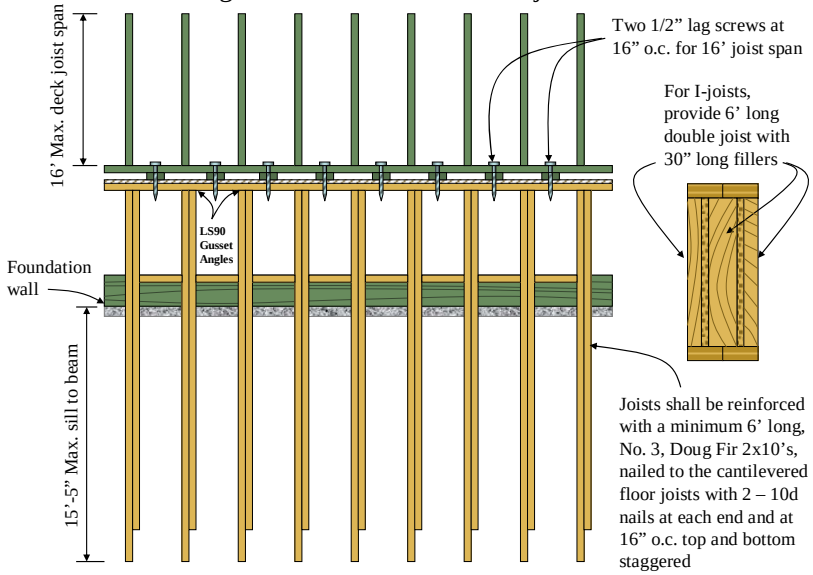

Figure 10

Headering off a cantilever

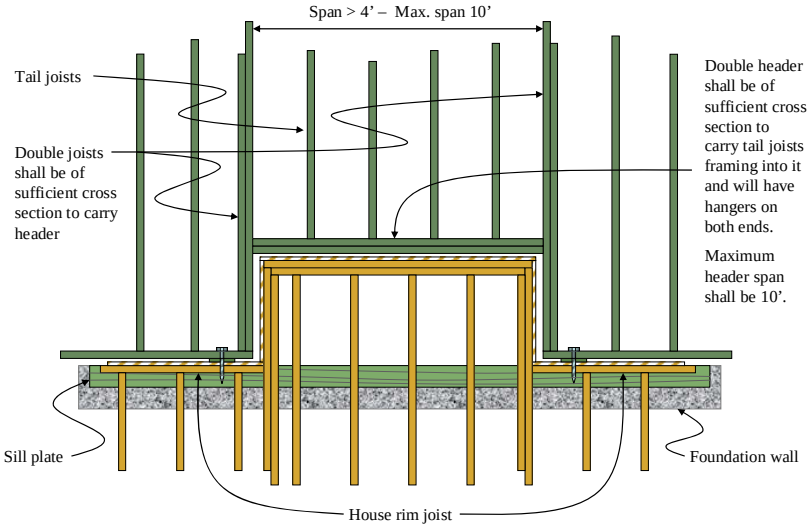

Figure 11

Framing around a chimney or bay window which extends beyond the exterior wall of the house may be accomplished by headering across the chimney or bay window area with a double header attached to double joists on each side. Doubling of these members is required when the header span is greater than 4 feet. The double joists and header shall be of sufficient cross section to carry the tail joists framing into the header.

The header shall be supported on each end by a double hanger when the header span exceeds 6 feet. Tail joists over 12 feet long shall be supported at the header by joist hangers. A space shall be provided between the doubled framing members and the house to allow for water drainage and air circulation.

Joist and Beam Spans

Floor joists and beams have certain span capabilities based on the size, grade, species and spacing of the material used for the joists or beams and the loads that are imposed on them. Deck joists are required to be designed for 40 pounds per square foot live load, just like a residential floor. Most joist material used for building decks is No. 2 and better, treated Southern Pine. There are two sets of spans for treated Southern Pine shown in Table 8 on the right. The visually graded column is the one to use. The wet service column is for applications where the wood is going to be wet for an extended period of time. Deck material gets wet and then dries out, so it is not considered wet service

Treated Southern Pine Span Tables

Floor Joists — *40 psf Live Load, 10 psf Dead Load, ℓ/360*

Size *inches*	Spacing *inches o.c.*	No. 2 *Visually Graded*	No.2 *Wet Service*
2 x 6	12	10-9	10-4
	16	9-9	9-5
	24	8-6	7-10
2 x 8	12	14-2	13-8
	16	12-10	12-5
	24	11-0	10-2
2 x 10	12	18-0	17-5
	16	16-1	15-10
	24	13-1	13-1
2 x 12	12	21-9	21-2
	16	18-10	18-10
	24	15-5	15-5

Design values for dimension lumber are based on normal use conditions (moisture content ≤19%). These values are intended for use in covered structures, or where the moisture content in use does not exceed 19% for an extended period of time.

Table 8

Joist span measurement and beam to post connection

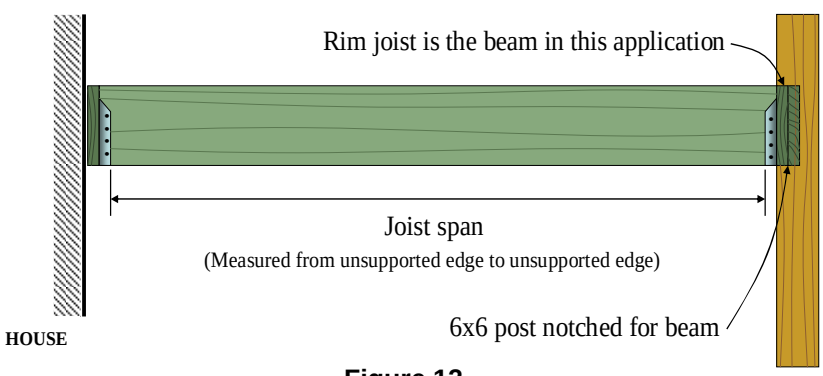

Figure 12

To find the span capabilities for the deck joists, find the size of material being used and the on-center spacing. Then read down under the No. 2, visually graded column to find the appropriate span. Joist spans are measured from unsupported edge to unsupported edge. See Figure 12 for a visual representation of how a joist span is measured.

Remember that the ends of the joists will need to be properly supported. If they are running between the ledger and a beam, they will need joist hangers on both ends. The typical double shear joist hangers shall be attached with full 10d nails that are 3 inches long. This is required for all the toe-nailed connections on the side of the hanger and the straight in nailing on the face of the hanger where the hanger is connecting to a double 2x beam. The only place 1-1/2 inch joist hanger nails may be used is the face nailing of the hanger to the ledger on the house. The toe-nails must still be 3 inch 10d nails. **Screws shall not be used to support joist hangers or in hold downs unless the screws are supplied by the hanger manufacture and designed for that application.**

Calculating beam spans is a bit more complicated than floor joists. First, the tributary width supported by the beam must be determined. For simple spans the tributary width is 1/2 the joist length. For a center beam the tributary width is the sum of 1/2 the span from each side. If there is a cantilever, we add in the total length of the cantilever. Note that 2x8 and larger floor joists cannot cantilever more than 3 feet.

Tributary load width (t) for deck beams

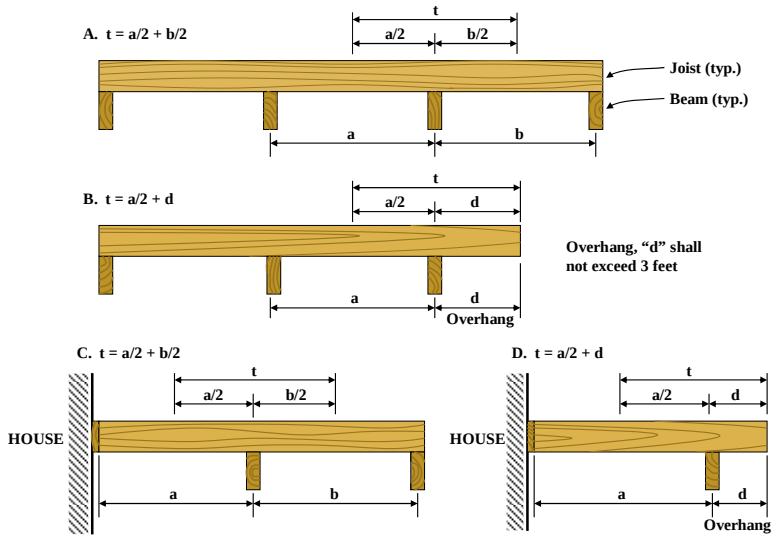

Figure 13

Once the tributary area has been determined, the beam span can then be determined using Tables 9 or 10. Decide what will be used for the beam and check the span based on the tributary load width. If 2 – 2x10's are going to be used as the beam and the tributary area of the beam is 7 feet, the maximum span for the beam is 9 feet, 2 inches.

When multiple members are used, they must be attached so they act as one. This requires nailing the members together with 10d nails at 16 inches on-center staggered.

If a single Cedar 4x10 were going to be used instead of a built-up treated beam, then Table 8 would be used. In the case of our 7 foot tributary area, a 4x10, which by the way, is *not* the same as 2 – 2x10's, has a span capability of 8 feet, 11 inches.

Maximum beam spans for Treated Southern Pine

40 lb/ft² live load – 10 lb/ft² dead load									
Beam size	Tributary load width (ft)								
	4'	5'	6'	7'	8'	9'	10'	11'	12'
2x6	5-7	4-9	4-2	3-8	3-4	3-1	2-10	2-8	2-6
2x8	7-2	6-2	5-5	4-10	4-3	4-0	3-9	3-6	3-4
2x10	8-7	7-8	7-0	6-2	5-7	5-1	4-9	4-5	4-3
(2)2x6	7-10	7-0	6-5	5-11	5-7	5-2	4-9	4-5	4-1
(2)2x8	10-1	9-1	8-3	7-8	7-2	6-9	6-3	5-10	5-5
(2)2x10	12-0	10-9	9-10	9-2	8-5	8-1	7-8	7-4	7-0
(2)2x12	14-0	12-7	11-6	10-8	10-0	9-5	9-0	8-7	8-2
(3)2x8	12-10	11-10	10-10	10-0	9-5	8-10	8-5	8-0	7-6
(3)2x10	15-7	14-1	12-10	11-11	11-2	10-7	10-0	9-7	9-2
(3)2x12	18-3	15-5	15-0	13-11	13-1	12-4	11-9	11-2	10-9

Spans are distances in feet-inches between centers of posts or supports. Grade is No. 2 or Better. Number in parentheses is number of full-length nailed laminations.

Table 9

Maximum beam spans for Redwood and Western Red Cedar

40 lb/ft² live load – 10 lb/ft² dead load									
Beam size	Tributary load width (ft)								
	4'	5'	6'	7'	8'	9'	10'	11'	12'
4x6	7-4	6-7	6-0	5-6	5-2	4-11	4-8	4-5	4-3
4x8	9-8	8-8	7-10	7-3	6-10	6-5	6-1	5-10	5-7
4x10	11-10	10-7	9-8	8-11	8-4	7-11	7-6	7-2	6-10
4x12	13-9	12-4	11-3	10-5	9-9	9-2	8-8	8-4	7-11
6x8	9-3	8-3	7-7	7-0	6-7	6-2	5-10	5-7	5-4
6x10	13-2	11-9	10-9	9-11	9-3	8-9	8-4	7-11	7-7
6x12	15-11	14-3	13-0	12-0	11-3	10-7	10-1	9-7	9-2

Spans are distances in feet-inches between centers of posts or supports. Grade is No. 2 or Better.

Table 10

Note that 6x6 posts are designed to be used in vertical applications and should not be used as a beam in a horizontal application.

A beam should always be supported directly by the columns beneath it. This is usually accomplished by notching the beam into the post so there is direct wood to wood bearing. Note 6x6 posts are recommended if the beams are to be notched into the posts.

However, there are times when a beam must sit on top of a post. In these cases there must be a positive connection between the post and the beam. Sometimes a 2x scabbed on the side connecting the beam to the column is sufficient, but metal connectors are also available. See Figure 14 for different ways to connect beams to posts.

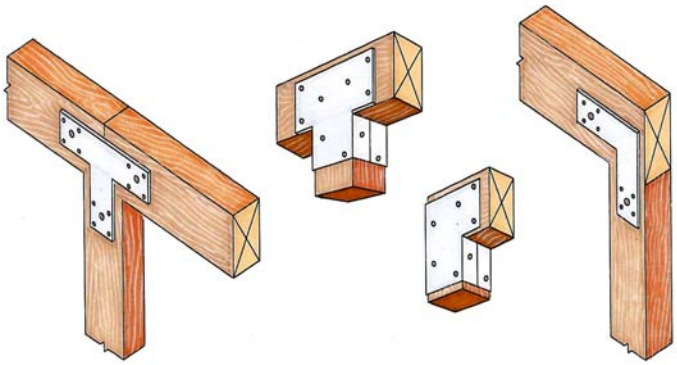

POST-TO-GIRDER CONNECTIONS

Figure 14

It should be noted that engineered lumber beams are now available with preservative treatment for exterior applications. The products are somewhat limited at this time but one such product is Parallam® Parallel Strand Lumber (PSL). See the manufacturer's specifications for design tables and construction details. Preservative treated Glulams are also available. These glulam beams are treated with a Copper Naphthenate (CuN) at 0.04 pcf. Glulam beams treated to this retention level shall be used in above ground applications only. There are also glulam columns that are treated with CuN at a retention level of 0.13 pcf which can be used in ground applications.

Measuring a beam span

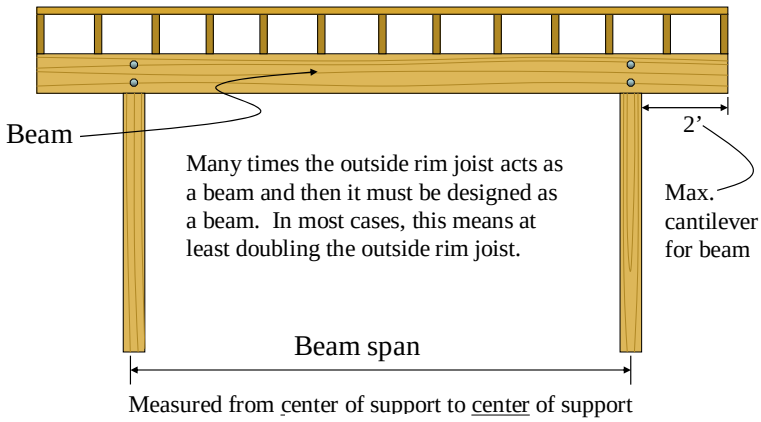

Figure 15

Note that beam spans are measured differently than joist spans. A beam span is measured from the center of support to the center of support. Also notice that a beam may only be cantilevered a maximum of 2 feet beyond the support.

If the beam is not notched into the post then the structural performance of the connection is limited to the capacity of the bolts which typically connect the beam members to the post. In this case, the tributary area that can be safely supported by the beam is greatly reduced. Bolting the beam members to the side of the 6x6 column is a type of connection that should be avoided if at all possible. Notching the beam into a 6x6 post or sitting the beam directly on top of the post allows direct wood to wood bearing, and this will always provide better support.

But, since this type of connection is occasionally used, Tables 11 and 12 have been provided showing the reduced area of deck that can be supported when attaching the beam to a post using only bolts to support the load. Note that the tables specify the size and number of bolts for use with various size beams and posts. The beam sizes in these tables are all based on No. 2, treated Southern Pine.

Again, bolting the beam members to the side of the post should be avoided whenever possible. This is not a recommended connection.

Beam-to-post connection

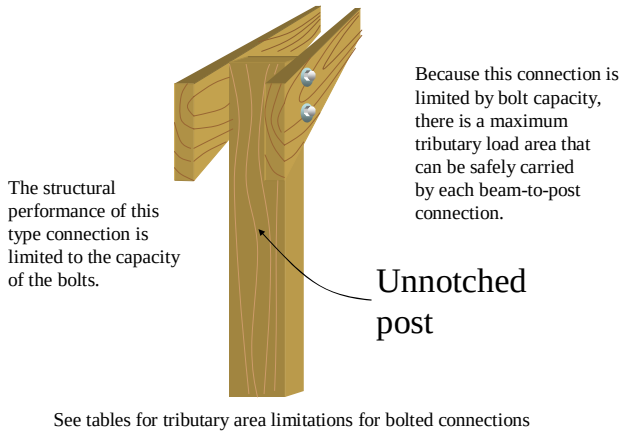

Figure 16

Reduced tributary areas of beams when just bolted to the side of columns

Live load (lb/ft^2)	Tributary load area (ft^2)	
	Southern pine	Redwood & Western Red Cedar
Two-bolt connection (2x6, 2x8)		
40	30	16
Three-bolt connection (2x10, 2x12)		
40	44	34

Table 11

Live load (lb/ft^2)	Tributary load area (ft^2)	
	Southern pine	Redwood & Western Red Cedar
Two-bolt connection (2x8, 2x10)		
40	42	27
Three-bolt connection (2x12)		
40	63	40

Table 12

Cantilevered Decks

It is often desirable to cantilever a deck for aesthetics or for other reasons. Certain considerations must be taken into account when using a cantilever. Deck joists 2x8 and larger may be cantilevered a maximum of 3 feet beyond the supporting beam as shown in Figure 17. The back span for a cantilever must be a minimum of twice the cantilevered distance.

Cantilevered joist detail

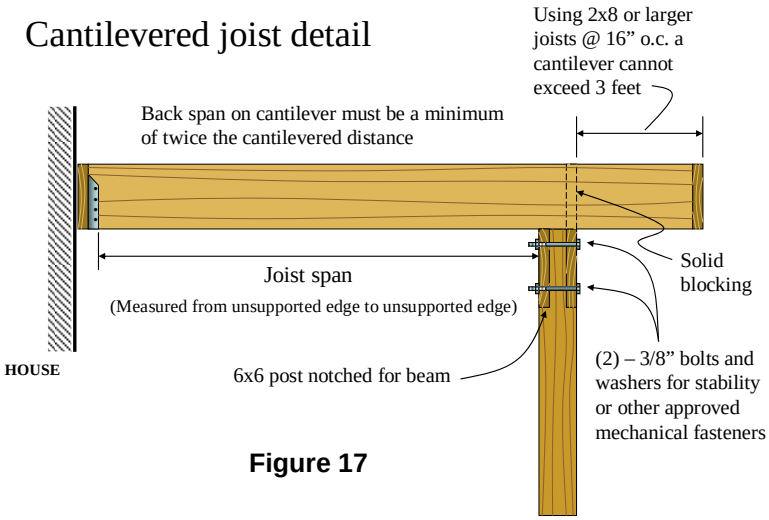

Figure 17

Cantilevered connection

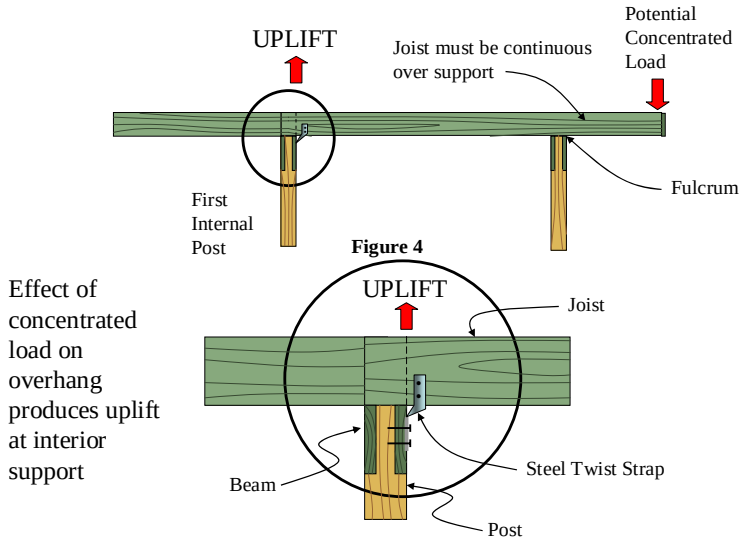

Figure 18

A concentrated load on the end of the cantilever has the effect of producing uplift on the joists at the first interior beam support or at the attachment to the house. When a deck is cantilevered, the connection to the exterior wall of the house or other framing members such as a beam shall be designed and constructed to resist uplift resulting from the full live load acting on the cantilevered portion of the deck. One way of resisting these loads is with a steel twist strap at each end to prevent uplift.

The beams in Figures 17 and 18 are notched into opposite sides of a 6x6 post. Due to the separation of the two members that make up this beam, solid blocking needs to be placed between the two beam members every 4 feet so they may be securely nailed together in order for them to act as one unit.

Guardrails

For obvious safety reasons, guardrails are required when the deck floor is more than 30 inches above another floor or the grade below. The guardrail shall not be less than 36 inches in height. Open sides of stairs with a total rise of more than 30 inches above the floor or grade below shall have guards not less than 34 inches in height measured vertically from the nosing of the treads.

The perimeter support posts can be incorporated into the railing of the deck. The posts extend from the footings to the top rail cap. Balusters or ornamental closures that do not allow a 4-inch diameter sphere to pass through are used to fill in between the posts. These balusters in combination with the cap rail and bottom rail transfer the loads to the posts. In order to do this successfully, the main railing posts should be spaced approximately 6 feet apart. The advantage of this design is that the full length of the post resists the rail load.

Guardrail detail

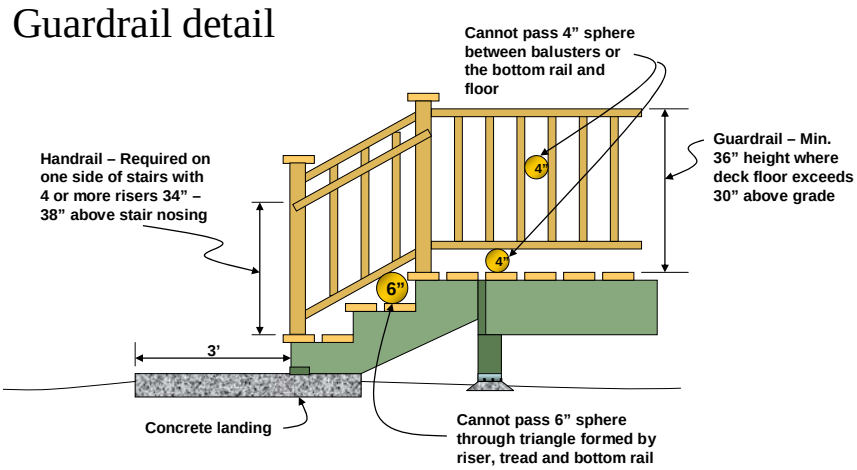

Figure 19

Guardrails and handrails shall be designed to support a single 200 pound concentrated load applied in any direction at any point along the top. This is to be sure the railing can support the loads of people leaning on or running into it.

The guardrail in-fill components which consist of the balusters or panel fillers shall be designed to withstand a horizontally applied load of 50 pounds distributed over a 1 square foot area.

When guardrails posts are not a continuous part of the support post system, they must be attached so they can withstand the prescribed loads without twisting the rim joist. It is therefore necessary to be sure the rim joist is blocked so it cannot rotate. Lag screws into the ends of the perpendicular joists or blocking are the proper connectors for this purpose. Nails into the end grain of the framing lumber will simply withdraw allowing the rim joist to twist. Figure 20 shows the reaction load that is imposed on the top bolt in various size rim joists when the code prescribed load is applied.

Post loaded to Code

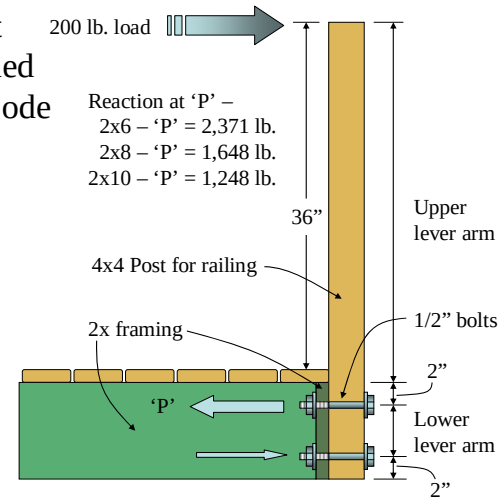

Figure 20

Reinforced Post Connections
(Plan view)

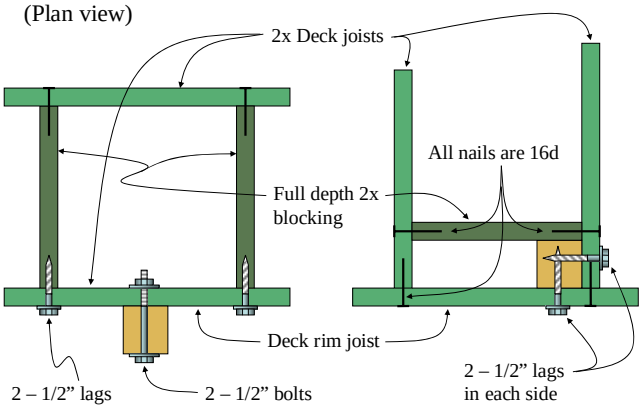

Figure 21

Figure 21 shows a plan view of the connection details for attaching the railing posts to the rim joist and the rim joist to the deck joists. Two lag screws in the deck joists or blocks on each side of the post are necessary to prevent the rim from rotating unless the post is blocked in from behind and lagged to a joist perpendicular to the rim joist. Use 1/2- inch diameter bolts when attaching 4x4 railing posts to the rim joist so it cannot work loose over time. This is especially true when the posts are being attached to the outside edge of the rim.

The triangular opening formed by the riser, tread and bottom rail of the guard at the open sides of a stairway is permitted to be of such a size that a 6 inches diameter sphere cannot pass through.

If the deck is less than 30 inches above grade, no guard rail is required on either the deck or the stairs.

Reinforced Post Connections
(Three dimensional view)

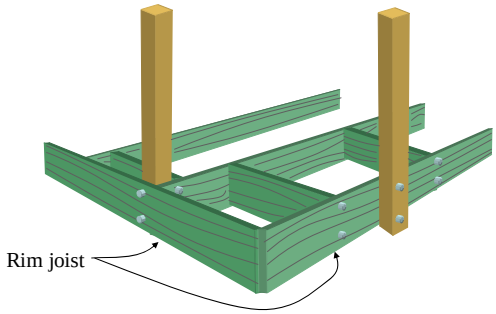

The leverage from a deck railing post will twist the rim joist unless the rim joist is securely fastened to the joist ends or perpendicular blocking. 1/2" lag screws are recommended for resisting code design loads.

Figure 22

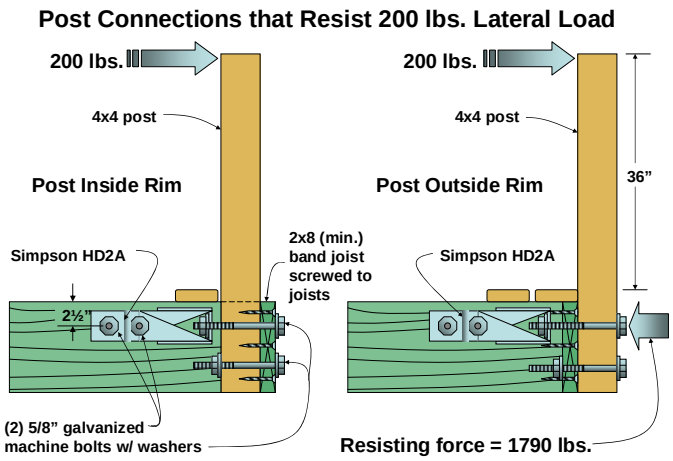

Figure 23

An extremely strong way to attach the railing posts, especially if they are to be installed on the outside of the rim joist, is to use a hold-down tension device on the top bolt to resist the tremendously high outward force at that point. This same device can also be used even if the post is installed on the inside of the rim joist. This connection will assure that the post will never loosen up over time from lateral loads acting against the top rail.

Stairs

Stairways shall have a minimum width of 36 inches. The maximum riser height shall be 7-3/4 inches and the minimum tread depth shall be 10 inches as measured in Figure 21. Open risers are permitted provided the opening between the treads does not allow the passage of a 4-inch diameter sphere. The opening between adjacent treads is not limited on stairs with a total rise of 30 inches or less. The greatest riser height and tread depth within any flight of stairs shall not exceed the smallest by more than 3/8-inch.

There shall be a minimum of two stringers where the spacing between them is 24 inches. This requires the treads to overhang 5 inches beyond each stringer. Three stringers may be used where the outside members are placed 36 inches apart and a third is centered in between. Now the treads are supported on the ends and in the center. This gives us a stronger set of stairs and allows us to meet the concentrated load requirements.

The stair stringers shall be 2x12, No. 2, treated Southern Pine. They must not be over notched when cutting in the rise and run. The cuts in these notches must end at the inside corners and not extend beyond that corner or the stringers will be weakened.

The top of each stringer shall be toe-nailed to a backer or rim joist and then supported by Simpson LS70 gusset angles or their equivalent on one side of each stringer. An alternate method would be to use sloped hangers.

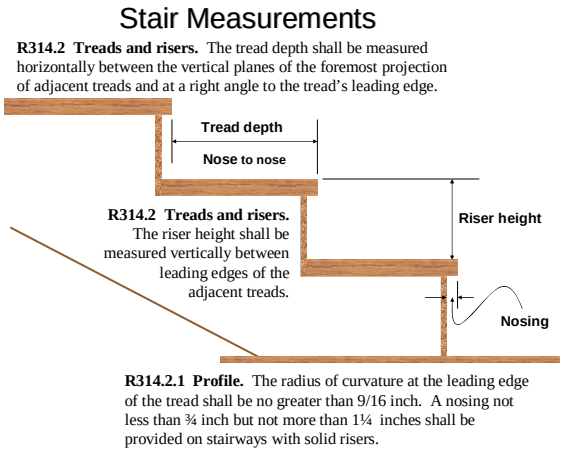

Figure 24

The bottom of these stringers shall rest on a landing. It is recommended that this landing be concrete. The bottom of the stringers shall then be notched over a treated 2x4 sleeper which shall be attached to the landing or the stringers could be notched so they would lock in behind

the concrete landing itself. Either way effectively locks the stringers in place so they cannot move.

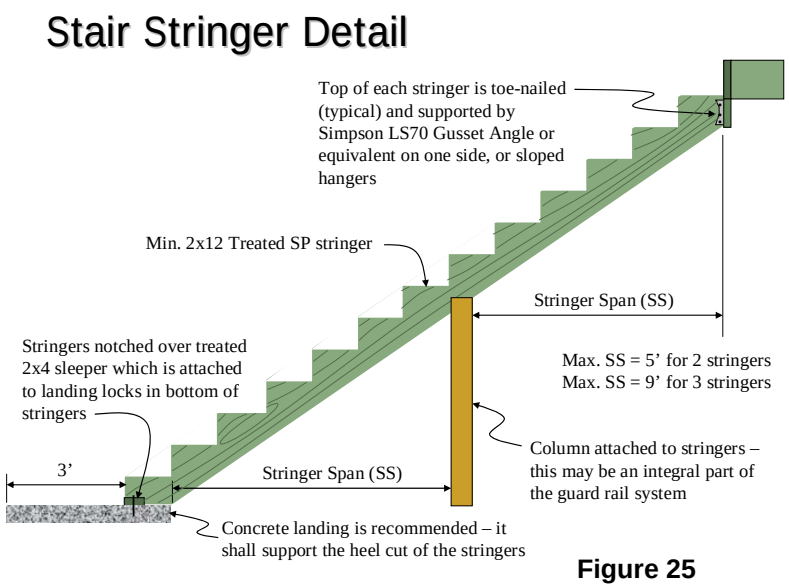

Figure 25

The stringers also have a certain span capability. When using 2 stringers to support the stairway, the maximum span for the stringers is 5 feet. When using 3 stringers the maximum span is increased to 9 feet. The span is measured horizontally from point of support to point of support. See Figure 25.

The spacing the stringers in either manner must meet the 300 pound concentrated load requirement on the treads. If the same material that is being used for the decking is going to be used for the stair treads, see Table 1 for span capabilities. When using two stringers, it is usually necessary to set the stringers closer together than the overall width of the stairs and cantilever the stair treads. As a general rule, 2x stair treads can be cantilevered 5 inches. For stairs wider than the typical 3 feet, stringers should be placed at 16 inches on center when using 5/4 thick treads or composite treads and 24 inches on center when using full 2x dimension lumber treads.

Handrails

Handrails are required on stairs with four or more risers. The handrail shall be continuous the full length of the stairs and shall start at a point directly above the top riser of the flight and continue to a point directly above the lowest riser in the flight. The ends of the handrail shall be returned to the posts at the top and bottom of the stairs.

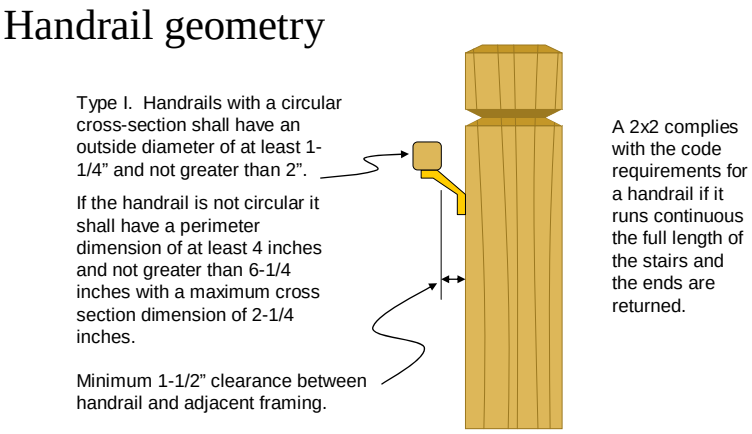

Figure 26

The handrail shall be between 34 inches and 38 inches above the nosing of the treads and shall be provided on at least one side of the stairway. There shall be a minimum clearance of 1-1/2 inches between the handrail and adjacent framing. Type I handrails shall have a circular cross-section with an outside diameter of at least 1-1/4 inches but not greater than 2 inches. If the handrail is not circular it shall have a perimeter diameter of at least 4 inches and not greater than

6-1/4 inches with a maximum cross section of 2-1/4 inches. This means 2x2 lumber with eased edges will meet the requirements of the code.

Inspections

Inspections are another part of the process. These inspections are done as a service to the homeowner and are required for all decks. Inspections should take place when various phases of the construction are completed. Where a deck is too close to the ground to verify the connection between the ledger and the house at the time of the inspection, then the deck shall be self-supporting.

Footing or pier hole inspections may be required before the concrete is placed. Remember that dry set concrete is not approved by most concrete manufacturers. The concrete needs to be properly mixed with the prescribed amount of water prior to placing in order for it to work properly and to meet code.

A separate framing (rough-in) inspection may be required if the under-floor framing and connections cannot be easily inspected during the final inspection. A final inspection is required after all the work is complete.

When scheduling an inspection, call 24 hours in advance to set up a time for the inspector to make his visit. The builder or homeowner is not required to be present for the inspections but they are welcome to be there if they would like to be. If the homeowner is not going to be present, they must give the inspector permission to enter their property to complete the inspection or schedule it for a time when they can be there.

This publication was produced by TimberTek Consulting and is endorsed by the Johnson County Building Officials Association. It is published by the Johnson County Contractor Licensing Program for distribution throughout Johnson County. Jurisdictions within Johnson County wishing to obtain copies of this publication for distribution in their community should contact the Johnson County Contractor Licensing Program in Olathe, Kansas.

Plan