SECTION R507
EXTERIOR DECKS

R507.1 Decks.

Wood-framed decks shall be in accordance with this section or Section R301 for materials and conditions not prescribed herein. Where supported by attachment to an exterior wall, decks shall be positively anchored to the primary structure and designed for both vertical and lateral loads.

Such attachment shall not be accomplished by the use of toenails or nails subject to withdrawal. Where positive connection to the primary building structure cannot be verified during inspection, decks shall be self-supporting. For decks with cantilevered framing member's connections to exterior walls or other framing members shall be designed and constructed to resist uplift resulting from the full live load specified in Table R301.5 acting on the cantilevered portion of the deck.

❖ If an exterior wall is used to support a deck, the deck framing must be positively attached to the building structure. This connection design must include a consideration of both vertical and lateral loads, and the connection must be available for inspection. If it is not, this method of support is not permitted and the deck must be self-supporting.

If a deck has cantilevered framing, the framing must have a connection to its support that is designed to resist any uplift resulting from the full live load acting on the cantilevered span only. This load condition will produce maximum uplift at the support opposite the cantilevered end.

R507.2 Deck ledger connection to band joist.

Deck ledger connections to band joists shall be in accordance with this section, Tables R507.2 and R507.2.1, and Figures R507.2.1(1) and R507.2.1(2). For other grades, species, connection details and loading conditions, deck ledger connections shall be designed in accordance with Section R301.

❖ This section contains the prescriptive design for positive anchorage of a deck attached to the primary structure. The design is for vertical loads only [50 psf (2394 Pa) maximum] on the deck. Section R507.2.1 specifies the material requirements for the deck ledger. Deck ledgers must not support the girders supporting deck joists. The deck ledger is prohibited from being supported by stone or masonry veneer.

Researchers at Virginia Tech University and Washington State University have tested simulated deck-ledger to house-band-joist connections in their respective laboratories. A practical range of pressure-preservative-treated (PPT) deck ledger lumber (incised Hem-fir and Southern pine) was attached to a simulated Spruce-pine-fir band joist by $^{1}/_{2}$-inch (12.7 mm) lag screws or bolts with washers. The ledger connection tests did not include carriage bolts; therefore, an engineered design of the ledger connection is required if carriage bolts are used. The deck ledger was separated from the house band joist by placing a piece of $^{15}/_{32}$-inch wall sheathing in the connection, and in another test case for bolts only, a $^{1}/_{2}$-inch (12.7 mm) stack of washers was inserted into the connection to produce a drainage plane. The specimens were tested to failure and the average test results were divided by a factor of 3.0, intended to provide an adequate in-service safety factor, and further divided by 1.6 to convert from a "test duration" to a "normal duration" of 10 years recognized by the NDS and IBC as the proper duration for an occupancy live load.

The test was made with two different band joists, a 2-inch (51 mm) nominal Spruce-pine-fir and a 1-inch by $9^{1}/_{2}$-inch Douglas fir-laminated (DFL) veneer. Section R507.2.2 permits the DFL band joist in lieu of the 2-inch (51 mm) nominal. Due to the limited investigation into the performance of composite-type band joists (only DFL was evaluated) and the possibility of band joists entering the market being a lower quality than what was tested at

Washington State University, engineered wood band joists are not included in the scope of the fastener spacing table. Instead, the attachment must be designed in accordance with accepted engineering practice where an engineered wood product is used as the band joist. The maximum distance between the face of the band joist and the deck ledger must not exceed 1 inch (25 mm). Note e of Table R507.2 will permit $^1/_2$-inch thickness of stacked washers to substitute for $^1/_2$inch of allowable sheathing thickness where combined with wood structural panel or lumber sheathing if the 1-inch distance is not exceeded.

Penetration of moisture at the interface of the deck and the exterior of the house can be detrimental to the connectors. For this reason, Section R502.2.3 requires the connectors to be hot-dipped galvanized or stainless steel.

The on-center spacing of the fasteners as shown in Table R507.2.1 and Figures R507.2.1(1) and R507.2.1(2) is the closest spacing for the two cases of deck ledger lumber tested. In deck construction, a joist hanger or angle connector is commonly installed at the end of the ledger board to support the deck rim joist. Often these members are double 2x members [3-inch (76 mm) nominal width]. The spacing of 2 inches to 5 inches (51 mm to 127 mm) from the ends will allow the installer flexibility to locate the lag screw or bolt so that it does not interfere with the installation of the joist hanger or structural connector. Five inches (127 mm) will accommodate an inverted flange double 2x joist hanger.

TABLE R507.2**.**

TABLE R507.2
DECK LEDGER CONNECTION TO BAND JOIST[a, b] (Deck live load = 40 psf, deck dead load = 10 psf, snow load ≤ 40 psf)

CONNECTION DETAILS	JOIST SPAN						
	6′ and less	6′1″ to 8′	8′1″ to 10′	10′1″ to 12′	12′1″ to 14′	14′1″ to 16′	16′1″ to 18′
	On-center spacing of fasteners						
$^1/_2$-inch diameter lag screw with $^1/_2$-inch maximum sheathing[c, d]	30	23	18	15	13	11	10
$^1/_2$-inch diameter bolt with $^1/_2$-inch maximum sheathing[d]	**36**	**36**	**34**	**29**	**24**	**21**	**19**
$^1/_2$-inch diameter bolt with 1-inch maximum sheathing[e]	36	36	29	24	21	18	16

For SI: 1 inch = 25.4 mm, 1 foot = 304.8 mm, 1 pound per square foot = 0.0479 kPa.

a) Ledgers shall be flashed in accordance with Section R703.4 to prevent water from contacting the house band joist.
b) Snow load shall not be assumed to act concurrently with live load.
c) The tip of the lag screw shall fully extend beyond the inside face of the band joist.
d) Sheathing shall be wood structural panel or solid sawn lumber.
e) Sheathing shall be permitted to be wood structural panel, gypsum board, fiberboard, lumber or foam sheathing. Up to $^1/_2$-inch thickness of stacked washers shall be permitted to substitute for up to $^1/_2$ inch of allowable sheathing thickness where combined with wood structural panel or lumber sheathing.

❖ See the commentary to Sections R507.2 and R507.2.1.

R507.2.1 Ledger details.

Deck ledgers installed in accordance with Section R507.2 shall be a minimum 2-inch by 8-inch (51 mm by 203 mm) nominal, pressure-preservative-treated southern pine, incised pressure-preservative-treated Hem-fir, or

approved, naturally durable, No. 2 grade or better lumber. Deck ledgers installed in accordance with Section R507.2 shall not support concentrated loads from beams or girders. Deck ledgers shall not be supported on stone or masonry veneer.

❖ See the commentary to Section R507.2.

TABLE 507.2.1.

TABLE R507.2.1
PLACEMENT OF LAG SCREWS AND BOLTS IN DECK LEDGERS AND BAND JOISTS

MINIMUM END AND EDGE DISTANCES AND SPACING BETWEEN ROWS

	TOP EDGE	BOTTOM EDGE	ENDS	ROW SPACING
Ledger[a]	2 inches[d]	$^3/_4$ inch	2 inches[b]	$1^5/_8$ inches[b]
Band Joist[c]	$^3/_4$ inch	2 inches	2 inches[b]	$1^5/_8$ inches[b]

For SI: 1 inch = 25.4 mm.

a) Lag screws or bolts shall be staggered from the top to the bottom along the horizontal run of the deck ledger in accordance with Figure R507.2.1(1).
b) Maximum 5 inches.
c) For engineered rim joists, the manufacturer's recommendations shall govern.
d) The minimum distance from bottom row of lag screws or bolts to the top edge of the ledger shall be in accordance with Figure R507.2.1(1).

❖ See the commentary to Section R507.2.1.

FIGURE R507.2.1 (1).

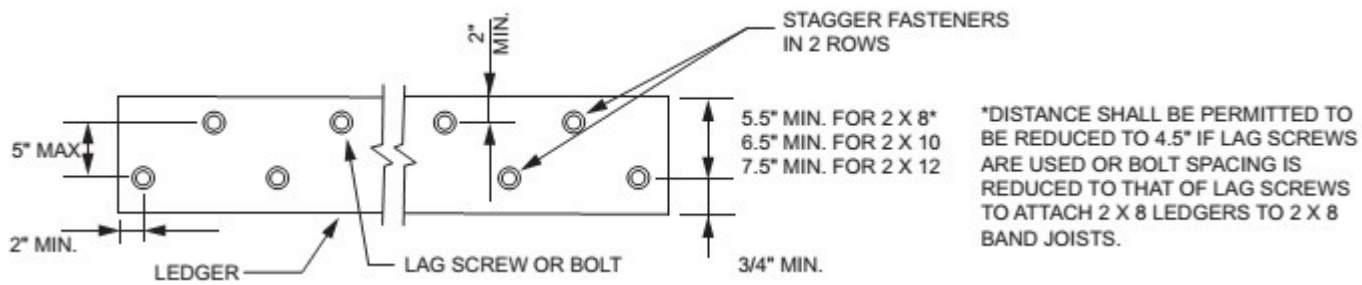

For SI: 1 inch = 25.4 mm.

FIGURE R507.2.1 (1)
PLACEMENT OF LAG SCREWS AND BOLTS IN LEDGERS

❖ See the commentary to Section R507.2.

FIGURE R507.2.1 (2).

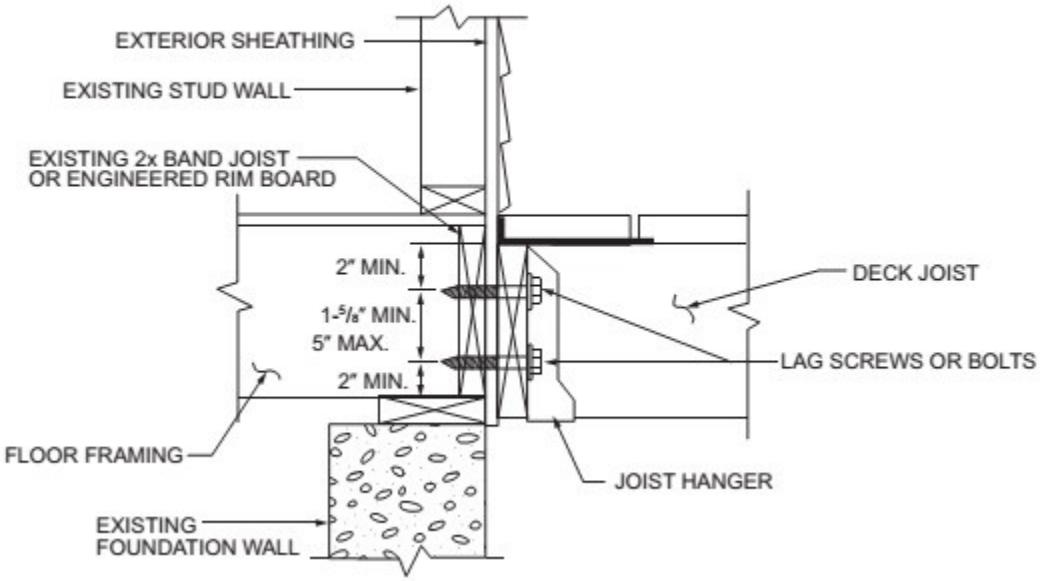

For SI: 1 inch = 25.4 mm.

FIGURE R507.2.1 (2)
PLACEMENT OF LAG SCREWS AND BOLTS IN BAND JOISTS

❖ See the commentary to Section R507.2.

R507.2.2 Band joist details.

Band joists attached by a ledger in accordance with Section R507.2 shall be a minimum 2-inch-nominal (51 mm), solid-sawn, spruce-pine-fir lumber or a minimum 1-inch by 9½-inch (25 mm × 241 mm) dimensional, Douglas fir, laminated veneer lumber. Band joists attached by a ledger in accordance with Section R507.2 shall be fully supported by a wall or sill plate below.

❖ See the commentary to Section R507.2.

R507.2.3 Ledger to band joist fastener details.

Fasteners used in deck ledger connections in accordance with Table R507.2 shall be hot-dipped galvanized or stainless steel and shall be installed in accordance with Table R507.2.1 and Figures R507.2.1(1) and R507.2.1(2).

❖ See the commentary to Section R507.2.

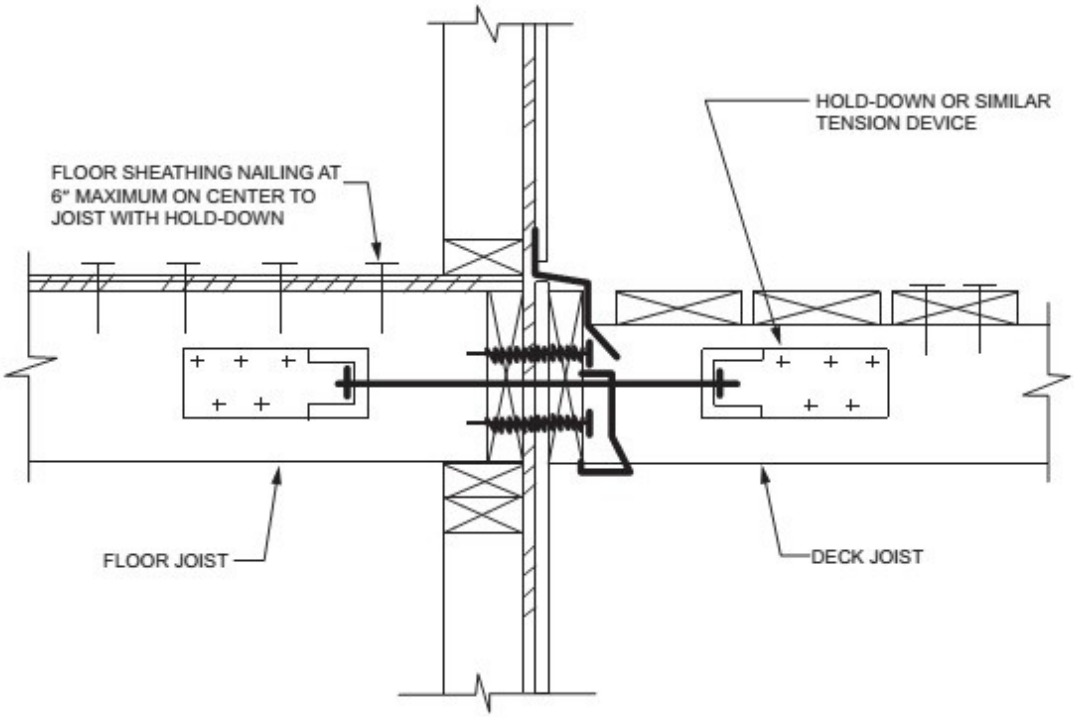

For SI: 1 inch = 25.4 mm.

FIGURE 507.2.3(1)
DECK ATTACHMENT FOR LATERAL LOADS

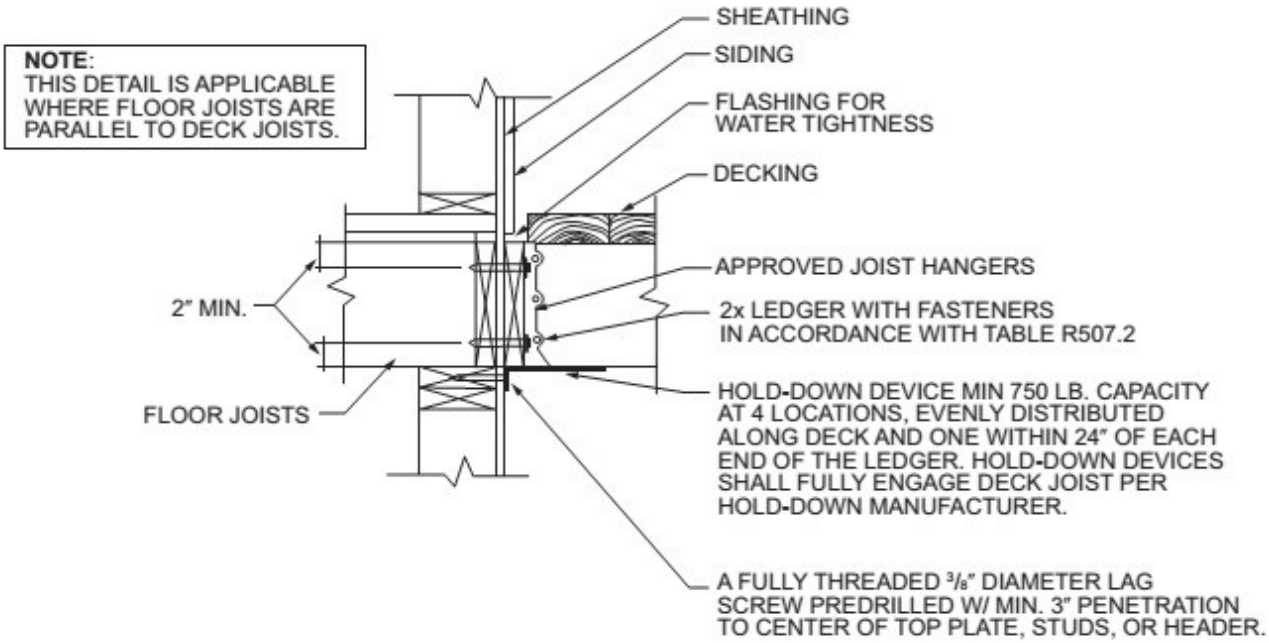

For SI: 1 inch = 25.4 mm, 1 foot = 304.8 mm.

FIGURE R507.2.3 (2)
DECK ATTACHMENT FOR LATERAL LOADS

R507.2.4 Deck lateral load connection.

The lateral load connection required by Section R507.1 shall be permitted to be in accordance with Figure R507.2.3(1) or R507.2.3(2). Where the lateral load connection is provided in accordance with Figure R507.2.3 (1), hold-down tension devices shall be installed in not less than two locations per deck, within 24 inches of each end of the deck. Each device shall have an allowable stress design capacity of not less than 1,500 pounds (6672 N). Where the lateral load connections are provided in accordance with Figure R507.2.3(2), the hold-down tension

devices shall be installed in not less than four locations per deck, and each device shall have an allowable stress design capacity of not less than 750 pounds (3336 N).

❖ The code requires decks that are supported by attachment to an exterior wall to be positively anchored to the primary structure, and be designed for both vertical and lateral loads. The vertical and lateral loads referred to are code-prescribed loads such as dead, live, wind and seismic loads. The magnitude of the lateral loads to be resisted is not specified and must be determined in accordance with accepted engineering practice.

Attachment only to the band joist may not be sufficient for the lateral loads. Positive anchorage of the deck joist to the floor framing addresses this potential failure. Figures R507.2.3 (1) and R507.2.3 (2) show typical hold-down devices that provide a positive connection to the floor framing in order to resist the lateral loads. Figure R507.2.3 (1) is based on a similar figure from FEMA 232. The number required and actual design of the connection to resist the lateral loads must be determined in accordance with accepted engineering practice. Where Figure R507.2.3(1) is used, a minimum of two hold-down devices, located within 24 inches of each end of the deck, with a design capacity of 1,500 pounds (6672 N) each, are required.

Figure R507.2.3 (2) provides an alternative prescriptive method to achieve an acceptable lateral load connection for residential decks. For new or replacement decks on existing homes, builders or homeowners must often remove interior sheet rock on ceilings in order to install hold-down tension devices as required by Figure R507.2.3(1). Figure R507.2.3(2) achieves an acceptable lateral load connection between the deck and primary structure by permitting the installation of surface-mounted hold-down connection devices spread out along the length of the ledger and precludes the need to make expensive and unnecessary ceiling repairs. Where Figure R507.2.3 (2) is used, a minimum of four hold-down devices, with one located within 24 inches of each end of the deck, with a design capacity of 750 pounds each, are required.

Where Figure R507.2.3 (1) or R507.2.3 (2) is not used, the quantity and load capacity must comply with the engineered design.

FIGURE 507.2.3(1)**.**

❖ See the commentary to Section R507.2.4.

FIGURE 507.2.3(2)**.**

❖ See the commentary to Section R507.2.4.

R507.3 Plastic composite deck boards, stair treads, guards, or handrails.

Plastic composite exterior deck boards, stair treads, guards and handrails shall comply with the requirements of ASTM D7032and the requirements of Section 507.3.

❖ Plastic composite, as defined in Section R202, is a generic designation that refers to wood/plastic composites and plastic lumber. Plastic composite (PC) materials, commonly used in exterior deck boards, guards and handrails, must be rated for appropriate performance criteria. These materials have a widespread acceptance for residential construction, and labeling requirements for PCs allow the safe application of these materials in exterior deck systems. The referenced standard, ASTM D7032, includes performance evaluations, such as flexural tests, ultraviolet resistance tests, freeze-thaw-resistance tests, biodegradation tests, fire-performance tests, creep-recovery tests, mechanical fastener holding tests and slip-resistance tests. The standard also includes considerations of the effects of temperature and moisture, concentrated loads and fire propagation tests.

Section R507.3.1 clarifies mandatory labeling requirements for plastic composites. Each deck board and stair tread, similar to pressure-preservative treated wood, is required to have a label. The required label would be applied on an end or on a face (side) of each board. Product labels will show verification of compliance with ASTM D7032 and provide the appropriate performance information. For example, deck board labels would identify the allowable load and span [e.g., 40 psf load on a 16-inch (406 mm) span would be expressed as "$^{16}/_{40}$"]. Handrails and guardrail systems, which are more often supplied as "kits" in packages, require labels on the items or on the packaging. The maximum span (maximum vertical post spacing) is required to be on the label, as is verifying compliance with ASTM D7032.

Section 507.3.5 includes the requirement for the installation of these PC products in accordance with the manufacturer's instructions, which is the best way to ensure that PCs perform to the required design loads, and installation instructions are an integral part of the manufacturer's labeling program.

The flame spread index of these PC materials is limited to 200 when tested in accordance with ASTM E84 or UL723. This is a measure of how rapid a fire will spread for these PC materials and is consistent with the requirements for interior finish material used throughout the building (see commentary, Section R302.9).

R507.3.1 Labeling.

Plastic composite deck boards and stair treads, or their packaging, shall bear a label that indicates compliance to ASTM D7032 and includes the allowable load and maximum allowable span determined in accordance with ASTM D7032. Plastic or composite handrails and guards, or their packaging, shall bear a label that indicates compliance to ASTM D7032 and includes the maximum allowable span determined in accordance with ASTM D7032.

❖ See the commentary to Section R507.3.

R507.3.2 Flame spread index.

Plastic composite deck boards, stair treads, guards, and handrails shall exhibit a flame spread index not exceeding 200 when tested in accordance with ASTM E84 or UL 723 with the test specimen remaining in place during the test.

Exception: Plastic composites determined to be non-combustible.

❖ See the commentary to Section R507.3.

R507.3.3 Decay resistance.

Plastic composite deck boards, stair treads, guards and handrails containing wood, cellulosic or other biodegradable materials shall be decay resistant in accordance with ASTM D 7032.

❖ See the commentary to Section R507.3.

R507.3.4 Termite resistance.

Where required by Section 318, plastic composite deck boards, stair treads, guards and handrails containing wood, cellulosic or other biodegradable materials shall be termite resistant in accordance with ASTM D7032.

❖ See the commentary to Section R507.3.

507.3.5 Installation of plastic composites.

Plastic composite deck boards, stair treads, guards and handrails shall be installed in accordance with this code and the manufacturer's instructions.

❖ See the commentary to Section R507.3.

R507.4 Decking.

Maximum allowable spacing for joists supporting decking shall be in accordance with Table R507.4. Wood decking shall be attached to each supporting member with not less than (2) 8d threaded nails or (2) No. 8 wood screws.

❖ Sections R507.4, R507.5, R507.6 and R507.7 provide the prescriptive design and details for deck boards, joist spacing, joist span, deck beam span, bearing requirements for joist and beams and connection of deck beam to deck post. Tables R507.4, R507.5 and R507.6 are based on wet use and treated or incised lumber. The span tables for wood floors in Section R502 are not appropriate for exterior wood-framed decks. Also, additional wood species that are not in Section R502 have been included. Table R507.4 provides for the deck boards to be either perpendicular or diagonal to the joist. The maximum angle of the diagonal deck board is 45 degrees from perpendicular.

The new tables are based on wood capacity using the *National Design Specification for Wood Construction* (NDS). The deck joist and beam tables assume No. 2 grade wood, wet use and incising, when applicable. Incising is done to assist chemical additives to soak deeper into preservative-treated lumber. Incising is

only assumed in lumber species that are preservative treated, such as Douglas fir-larch and Hem-fir and resistant to pressure treatment. Southern pine more easily absorbs preservatives during the pressure treating process and does not require incising.

Bearing requirements in Section R507.7 are consistent with bearing requirements in Section R502.6.

TABLE R507.4
MAXIMUM JOIST SPACING

MATERIAL TYPE AND NOMINAL SIZE	MAXIMUM ON-CENTER JOIST SPACING	
	Perpendicular to joist	Diagonal to joist[a]
$1^1/_4$-inch-thick wood	16 inches	12 inches
2-inch-thick wood	24 inches	16 inches
Plastic composite	In accordance with Section R507.3	In accordance with Section R507.3

For SI: 1 inch = 25.4 mm, 1 foot = 304.8 mm, 1 degree = 0.01745 rad.

a.Maximum angle of 45 degrees from perpendicular for wood deck boards

R507.5 Deck joists.

Maximum allowable spans for wood deck joists, as shown in Figure R507.5, shall be in accordance with Table R507.5. Deck joists shall be permitted to cantilever not greater than one-fourth of the actual, adjacent joist span.

❖ See the commentary to Section R507.4.

TABLE R507.5
DECK JOIST SPANS FOR COMMON LUMBER SPECIES[f] (ft. - in.)

SPECIES[a]	SIZE	SPACING OF DECK JOISTS WITH NO CANTILEVER[b] (inches)			SPACING OF DECK JOISTS WITH CANTILEVERS[c] (inches)		
		12	16	24	12	16	24
Southern pine	2 × 6	9-11	9-0	7-7	6-8	6-8	6-8
	2 × 8	13-1	11-10	9-8	10-1	10-1	9-8
	2 × 10	16-2	14-0	11-5	14-6	14-0	11-5
	2 × 12	18-0	16-6	13-6	18-0	16-6	13-6

	2 × 6	**9-6**	**8-8**	**7-2**	**6-3**	**6-3**	**6-3**
	2 × 8	**12-6**	**11-1**	**9-1**	**9-5**	**9-5**	**9-1**
Douglas fir-larch[d],hem-fir[d]spruce-pine-fir[d]	**2 × 10**	**15-8**	**13-7**	**11-1**	**13-7**	**13-7**	**11-1**
	2 × 12	**18-0**	**15-9**	**12-10**	**18-0**	**15-9**	**12-10**
	2 × 6	8-10	8-0	7-0	5-7	5-7	5-7
	2 × 8	11-8	10-7	8-8	8-6	8-6	8-6
Redwood,western cedars,ponderosa pine[e],red pine[e]	2 × 10	14-11	13-0	10-7	12-3	12-3	10-7
	2 × 12	17-5	15-1	12-4	16-5	15-1	12-4

For SI: 1 inch = 25.4 mm, 1 foot = 304.8 mm, 1 pound per square foot = 0.0479 kPa, 1 pound = 0.454 kg.

a) No. 2 grade with wet service factor.
b) Ground snow load, live load = 40 psf, dead load = 10 psf, L/Δ =360.
c) Ground snow load, live load = 40 psf, dead load = 10 psf, L/Δ = 360 at main span, L/Δ = 180 at cantilever with a 220-pound point load applied to end.
d) Includes incising factor.
e) Northern species with no incising factor
f) Cantilevered spans not exceeding the nominal depth of the joist arepermitted.

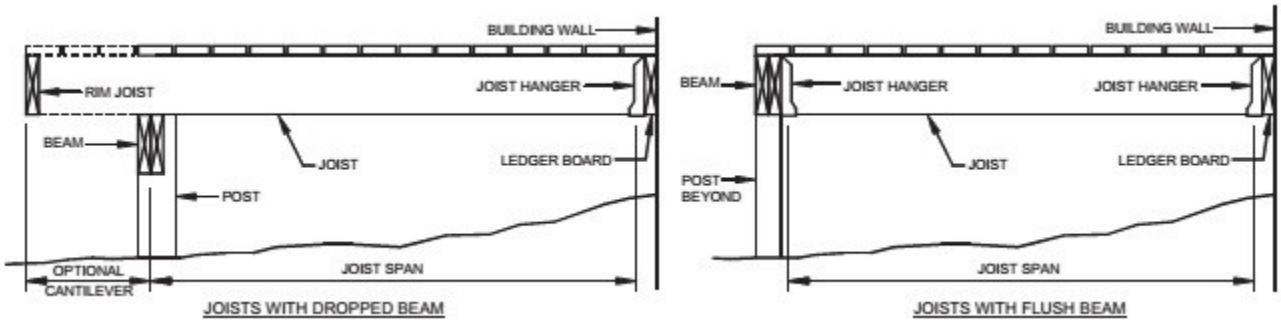

FIGURE R507.5
TYPICAL DECK JOIST SPANS

R507.5.1 Lateral restraint at supports.

Joist ends and bearing locations shall be provided with lateral restraint to prevent rotation. Where lateral restraint is provided by joist hangers or blocking between joists, their depth shall equal not less than 60 percent of the joist depth. Where lateral restraint is provided by rim joists, they shall be secured to the end of each joist with not less than (3) 10d (3-inch × 0.128-inch) nails or (3) No. 10 × 3-inch (76 mm) long wood screws.

❖ See the commentary to Section R507.4.

R507.6 Deck Beams.

Maximum allowable spans for wood deck beams, as shown in Figure R507.6, shall be in accordance with Table R507.6. Beam plies shall be fastened with two rows of 10d (3-inch × 0.128-inch) nails minimum at 16 inches (406 mm) on center along each edge. Beams shall be permitted to cantilever at each end up to one-fourth of the actual beam span. Splices of multispan beams shall be located at interior post locations.

❖ See the commentary to Section R507.4.

TABLE R507.6
DECK BEAM SPAN LENGTHS[a, b] (ft. - in.)

SPECIES[c]	SIZE[d]	DECK JOIST SPAN LESS THAN OR EQUAL TO:(feet)						
		6	8	10	12	14	16	18
Southern pine	2 − 2 × 6	6-11	5-11	5-4	4-10	4-6	4-3	4-0
	2 − 2 × 8	8-9	7-7	6-9	6-2	5-9	5-4	5-0
	2 − 2 × 10	10-4	9-0	8-0	7-4	6-9	6-4	6-0
	2 − 2 × 12	12-2	10-7	9-5	8-7	8-0	7-6	7-0
	3 − 2 × 6	8-2	7-5	6-8	6-1	5-8	5-3	5-0
	3 − 2 × 8	10-10	9-6	8-6	7-9	7-2	6-8	6-4
	3 − 2 × 10	13-0	11-3	10-0	9-2	8-6	7-11	7-6
	3 − 2 × 12	15-3	13-3	11-10	10-9	10-0	9-4	8-10
Douglas fir-larch[e],hem-fir[e],spruce-pine-fir[e],redwood,western cedars,ponderosa pine[f],red pine[f]	**3 × 6 or 2 − 2 × 6**	**5-5**	**4-8**	**4-2**	**3-10**	**3-6**	**3-1**	**2-9**
	3 × 8 or 2 − 2 × 8	**6-10**	**5-11**	**5-4**	**4-10**	**4-6**	**4-1**	**3-8**
	3 × 10 or 2 − 2 × 10	**8-4**	**7-3**	**6-6**	**5-11**	**5-6**	**5-1**	**4-8**

3 × 12 or 2 − 2 × 12	9-8	8-5	7-6	6-10	6-4	5-11	5-7
4 × 6	6-5	5-6	4-11	4-6	4-2	3-11	3-8
4 × 8	8-5	7-3	6-6	5-11	5-6	5-2	4-10
4 × 10	9-11	8-7	7-8	7-0	6-6	6-1	5-8
4 × 12	11-5	9-11	8-10	8-1	7-6	7-0	6-7
3 − 2 × 6	7-4	6-8	6-0	5-6	5-1	4-9	4-6
3 − 2 × 8	9-8	8-6	7-7	6-11	6-5	6-0	5-8
3 − 2 × 10	12-0	10-5	9-4	8-6	7-10	7-4	6-11
3 − 2 × 12	13-11	12-1	10-9	9-10	9-1	8-6	8-1

For SI: 1 inch = 25.4 mm, 1 foot = 304.8 mm, 1 pound per square foot = 0.0479 kPa, 1 pound = 0.454 kg.

a) Ground snow load, live load = 40 psf, dead load = 10 psf, L/Δ = 360 at main span, L/Δ = 180 at cantilever with a 220-pound point load applied at the end.
b) Beams supporting deck joists from one side only.
c) No. 2 grade, wet service factor.
d) Beam depth shall be greater than or equal to depth of joists with a flush beam condition.
e) Includes incising factor.
f) Northern species. Incising factor not included.

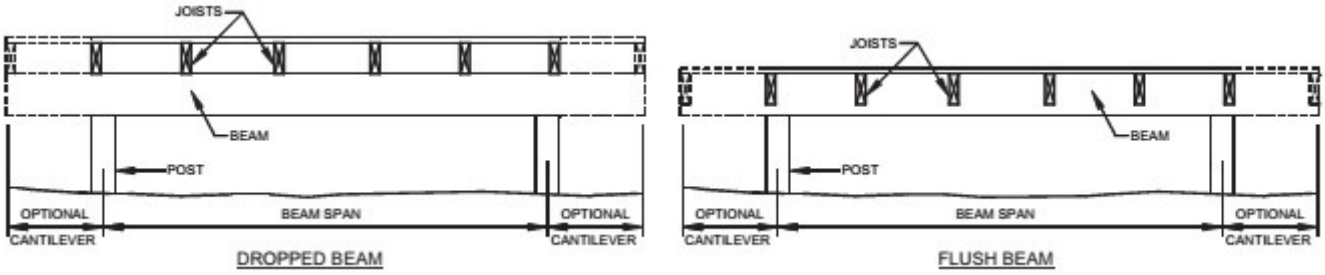

FIGURE R507.6
TYPICAL DECK BEAM SPANS

R507.7 Deck joist and deck beam bearing.

The ends of each joist and beam shall have not less than 1½ inches (38 mm) of bearing on wood or metal and not less than 3 inches (76 mm) on concrete or masonry for the entire width of the beam. Joist framing into the side of a ledger board or beam shall be supported by approved joist hangers. Joists bearing on a beam shall be connected to the beam to resist lateral displacement.

❖ See the commentary to Section R507.4.

R507.7.1 Deck post to deck beam.

Deck beams shall be attached to deck posts in accordance with Figure R507.7.1 or by other equivalent means capable to resist lateral displacement. Manufactured post-to-beam connectors shall be sized for the post and beam sizes. All bolts shall have washers under the head and nut.

Exception: Where deck beams bear directly on footings in accordance with Section R507.8.1.

❖ See the commentary to Section R507.4.

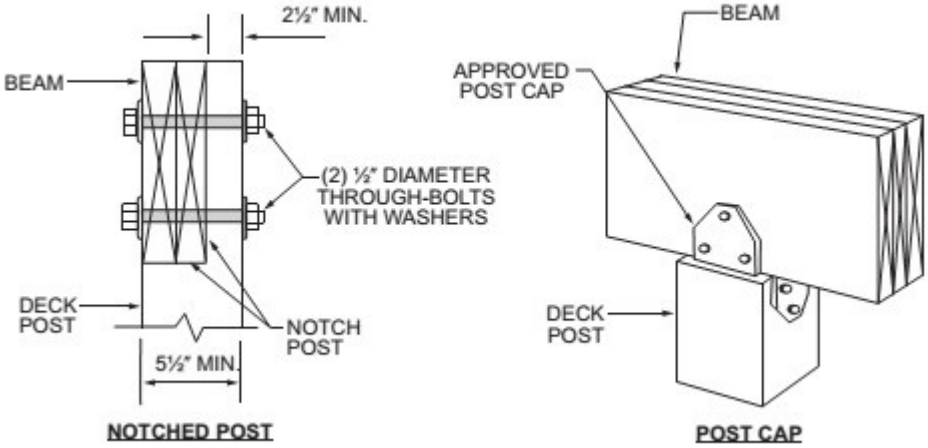

For SI: 1 inch = 25.4 mm.

FIGURE R507.7.1
DECK BEAM TO DECK POST

R507.8 Deck posts.

For single-level wood-framed decks with beams sized in accordance with Table R507.6, deck post size shall be in accordance with Table R507.8.

❖ Sections R507.8 and R507.8.1 contain prescriptive provisions for sizing wood posts and connecting the post to the foundation for a deck. The post-sizing provisions are presented in Table R507.8. Posts must be restrained at the bottom to prevent lateral displacement. The lateral restraint may be provided by a minimum post-to-footing connection based on the manufacturer's requirements for connections supplying lateral restraint or embedding the post 12 inches or greater into the soil or concrete piers. The minimum footing depth and connection requirement adds an additional provision useful in determining whether a deck meets minimum safety requirements. See Section R317.1.4 for decay resistance of wood columns.

Note: While Section R507 adds details needed for building a residential deck, the section does not cover all the details required to build a deck.

TABLE R507.8
DECK POST HEIGHT[a]

DECK POST SIZE	MAXIMUM HEIGHT[a]
4 × 4	8′
4 × 6	**8′**
6 × 6	14′

For SI: 1 foot = 304.8 mm.

a) Measured to the underside of the beam.

R507.8.1 Deck post to deck footing.

Posts shall bear on footings in accordance with Section R403 and Figure R507.8.1. Posts shall be restrained to prevent lateral displacement at the bottom support. Such lateral restraint shall be provided by manufactured connectors installed in accordance with Section R507 and the manufacturers' instructions or a minimum post embedment of 12 inches (305 mm) in surrounding soils or concrete piers.

❖ See the commentary to Section R507.8.

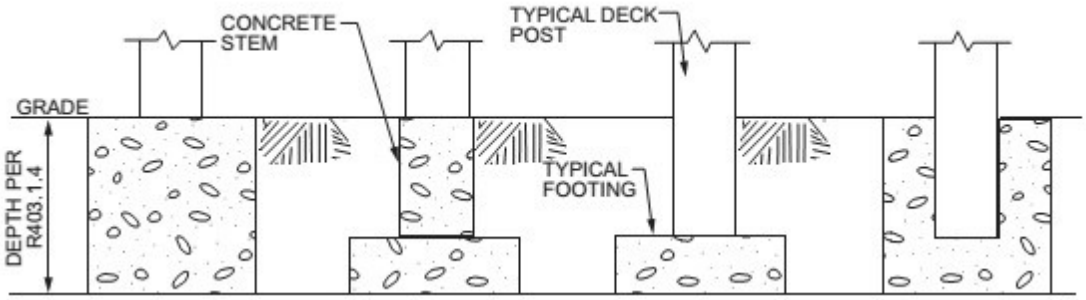

FIGURE R507.8.1
TYPICAL DECK POSTS TO DECK FOOTINGS

Deck Stair/Handrail/Guard Code Information from IRC 2015

R311.7 Stairways: The minimum width for stairs is 36”. The maximum riser height is 7-3/4” and the minimum rise is 4”. The minimum stair tread depth measured from nosing to nosing (also the stringer rough cut) is no less than 10”. The tread width and riser height shall not exceed the smallest by more than 3/8”. This means you will have to plan ahead to make sure each and every one of your stairs measurements are the same.

R311.7.8 Handrails: Stairs with 4 or more risers must have a **handrail** located above all portions of the treads, between 34” and 38” above the tread nosing, continuous between floors, with ends terminating at wall or newel post so as not to snag clothing. Circular handrails must be between 1.25” and 2” in diameter. Other shapes with a perimeter dimension between 4” and 6.25” with no cross sectional dimension greater than 2¼” are acceptable. Rails with a perimeter greater than 6.25” must have a finger grip routed in both sides. Handrails must extend from the top to bottom riser. ***Note: A 2x4 does not meet handrail cross section requirements.***

R312 Guards on Stairs: Open sides of stairs with over 30" rise above the adjacent floor or ground must have a **guardrail** at least 34” high measured vertically from a line connecting the leading edge of the stair treads. Required guards shall have balusters or other members arranged so that a 4 3/8" sphere cannot pass through them, except that the triangular opening formed by the guard, tread, and riser can be such that a 6” sphere cannot pass through it. Open risers are permitted by code with a catch because they may not be large enough to permit the passage of a 4” sphere.

R312 Guards on Decks: Decks with over 30" rise above the adjacent floor or ground must have a **guardrail** at least 36” high measured vertically above the deck or fixed seating. Openings shall not allow passage of a sphere 4” in diameter

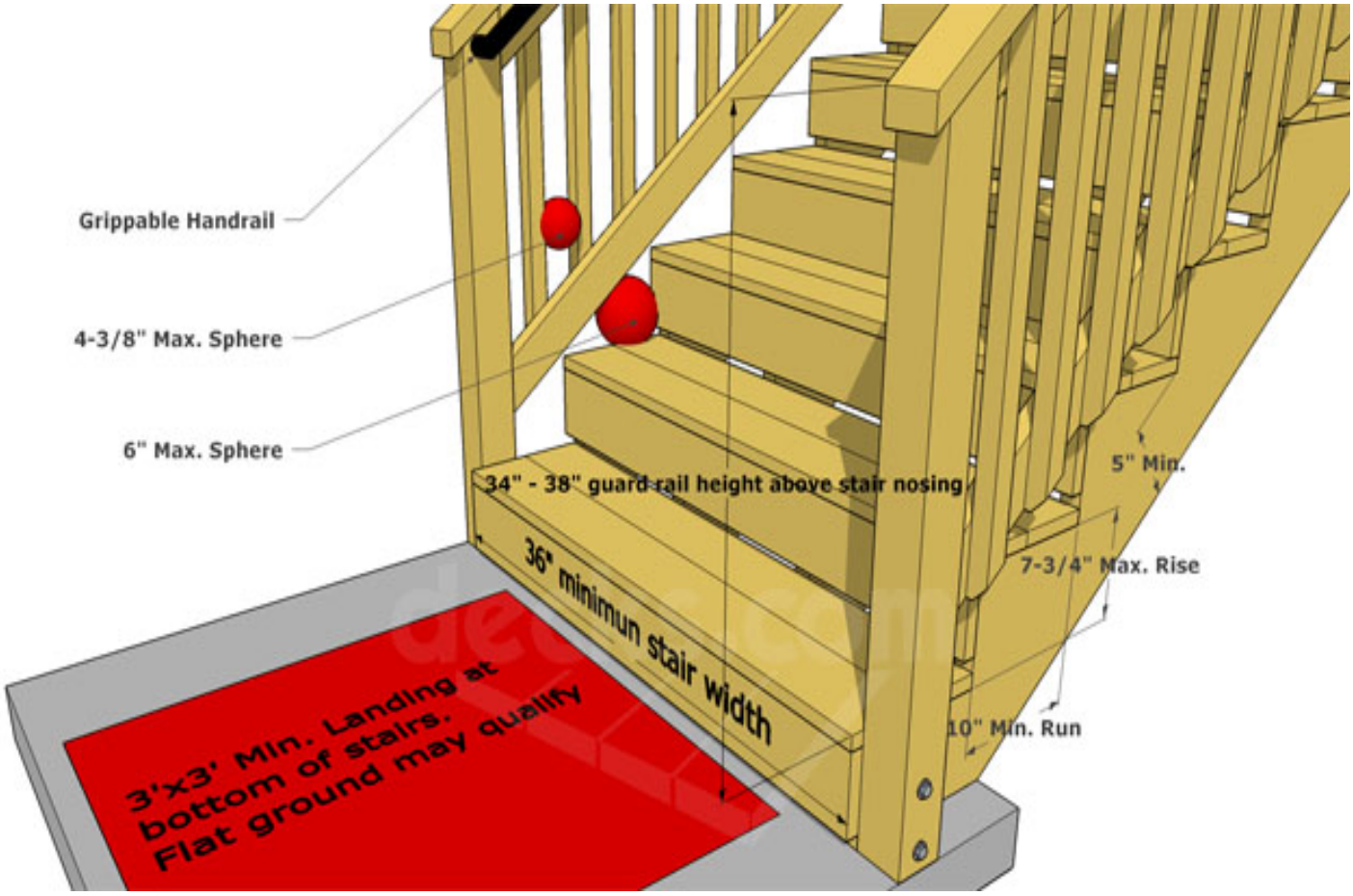

Footing Size for Pier Foundations

The footing size seems to be the biggest stumbling block for most people building a deck. Hopefully this article will shed some much needed light on the subject.

First we need to start with a virtual deck. Ours will be 10’ x 20’. To determine the proper footing size we need to figure out the load, or weight, on each post. The deck needs to be constructed to support 40 lb/sf of live load, such as people and furniture, and the dead load, which is the weight of the building materials. We will use 15 lbs/sf for the dead load. So our total load is 55 lbs/sf.

Now we need to figure out how many pounds each post is going to have to support. First, we draw a line across the middle of the deck between the house and deck posts. All of the deck area closest to the house (100 sf) will be supported by the house foundation through the transfer of load at the ledger board. Then we draw another line between the two posts in the area away from the house. Each of these two sections is 50 sf.

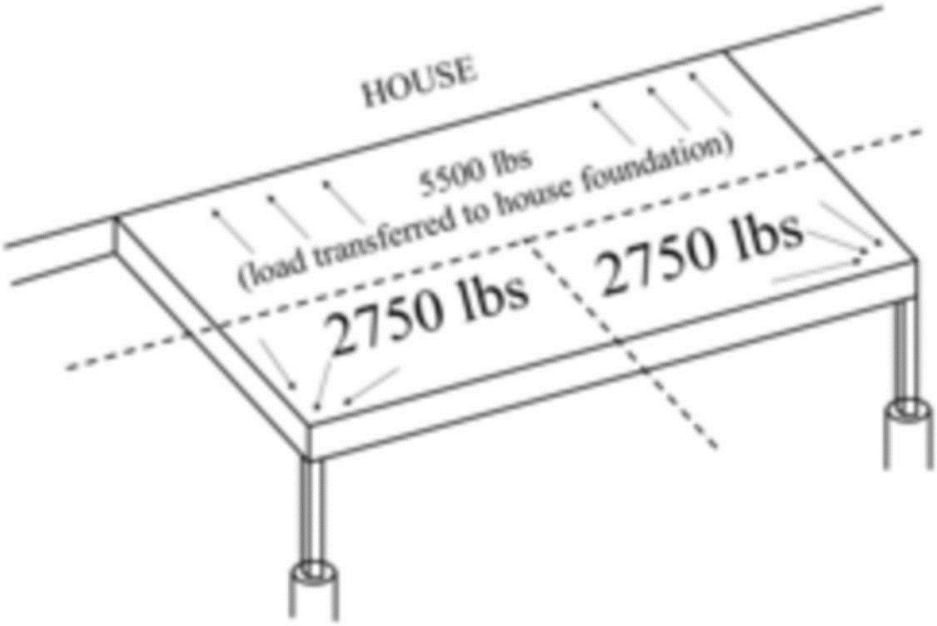

Now we can take each section and multiple it by our total load of 55lbs/sf which means each post is carrying 2750 lbs.

In order to properly determine the size of the footing we must also consider the soil type which our footings are sitting on. There are three common soils: gravel, sand, and clay, each with a progressively lower load capacity.

Using the table provided, our deck footings would need to be 14” in gravel, 17” in sand, or 19” in clay. The minimum diameter footing that can be used is 12”. The minimum thickness of a footing is 6” but it also must at least as thick as the distance the footer extends beyond the face of the post resting on it. Ex: A deck requires a 20” diameter footer and is using a 4” support post; 20-4=16 and 16/2=8 represent the extension on each side of the post; therefore the footer thickness in this case is required to be 8”. If you want to use a smaller size footing, you would have to add more posts to reduce the load on each post.

Obviously this is a very simple example but the logic works for any deck of any shape. Keep in mind that footing size is not the only consideration for the number and spacing of your posts. You’ll also have to review lumber spans and the allowable load for your wood post size.

The thickness of the footer “T” must be a minimum of 6” but must also meet the equations below:

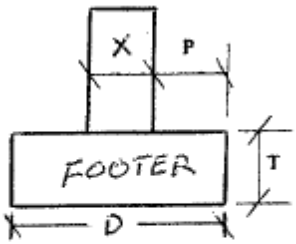

$$T \geq (D-X)/2$$

$$T \geq P$$

Maximum Allowable Load for Post Footings

Soil Type	**Gravel**	**Sand**	**Clay**
(Allowable Pressure)	3000 lbs/sf	2000 lbs/sf	1500 lbs/sf
Footing Diameter	**Maximum Load of Post Footing(lbs)**		
12"	2300	1500	1100
13"	2700	1800	1300
14"	3200	2100	1600
15"	3600	2400	1800
16"	4100	2700	2000
17"	4700	3100	2300
18"	5300	3500	2600
19"	5900	3900	2900
20"	6500	4300	3200
21"	7200	4800	3600
22"	7900	5200	3900
23"	8600	5700	4300
24"	9400	6200	4700