TOWN OF
TOPSHAM, MAINE

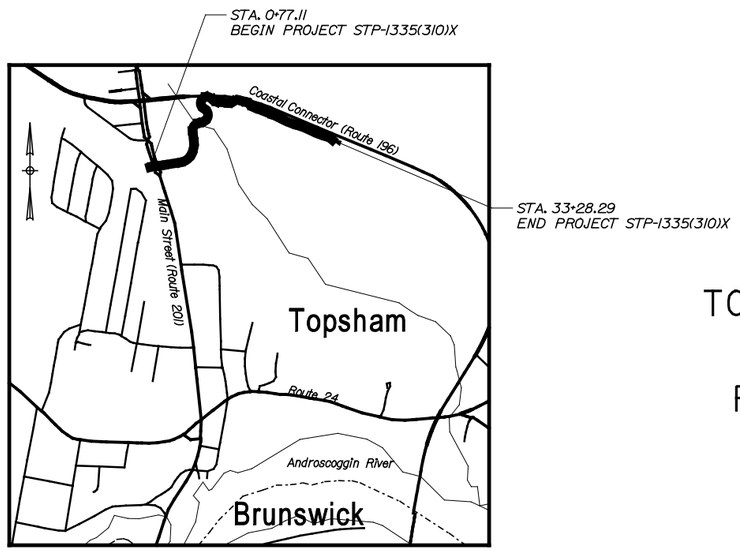

LOCATION MAP

1 0 1 2
Scale in Feet

TOPSHAM
SAGADAHOC
TOPSHAM TRAILS - PHASE I- S
STP-1335(310)X
PROJECT LENGTH : 0.616 mi.

INDEX OF SHEETS

Description	Sheet No.
Title Sheet	1
Typical Sections	2
General Notes	3
Plans	4-8
Profiles	9-13
Cross Sections	14-44
Retaining Wall Details	45

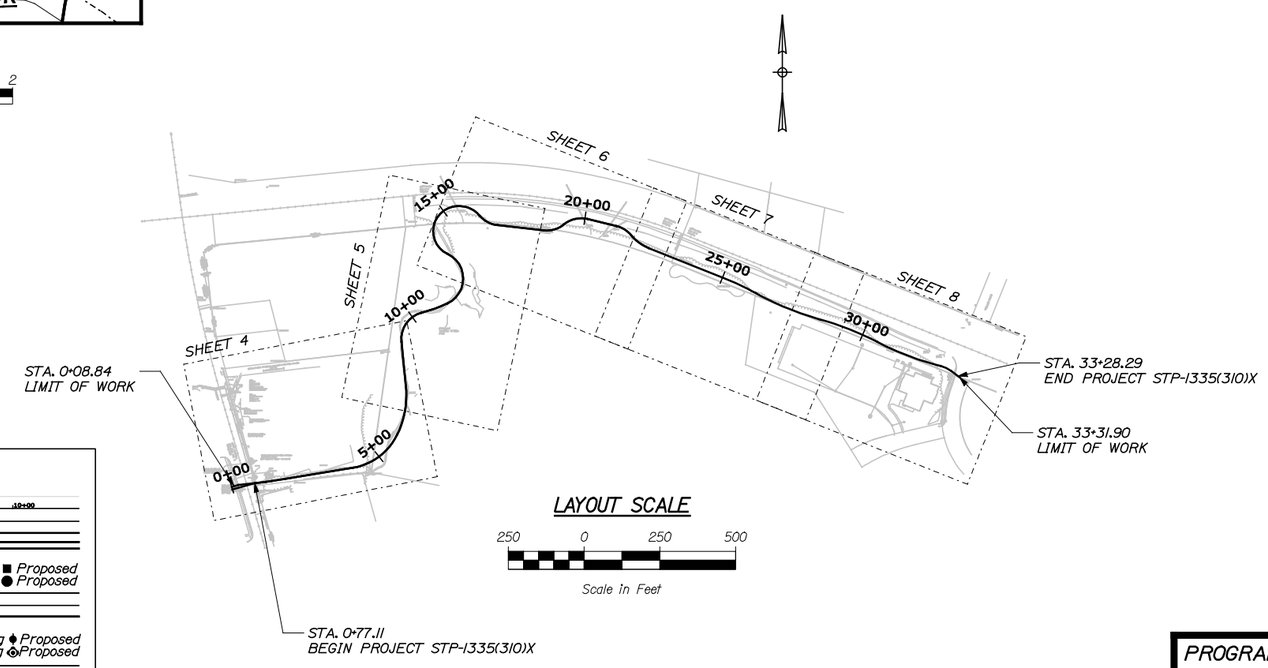

LAYOUT SCALE

250 0 250 500
Scale in Feet

PLAN LEGEND

Town, County, State
Property Lines
R/W Lines-Existing
R/W Lines-Proposed

Culvert-Existing
Culvert Proposed

Curbing — Existing — Proposed
Type 1
Type 3
Type 5

Outline of Bodies of Water
Ledge
Buildings

Trees — Conifer — Deciduous
Tree Line
Clearing Limit Line

Centerline-Existing
Centerline-Proposed — 10+00
Travelway-Existing
Travelway-Proposed
Railroad

Catch Basins — Existing — Proposed
Manholes — Existing — Proposed
Proposed Underdrain
Proposed Ditch
Existing Ditch

Utility Poles — Existing — Proposed
Fire Hydrants — Existing — Proposed
Existing Water Line
Existing San. Sewer
Existing San. Sewer Manhole

Guardrail-Existing
Guardrail-Proposed
Guardrail-Cable, Other

T·Y·LIN INTERNATIONAL

PROGRAM AREA: MULTIMODAL
SCOPE OF WORK: SHARED USE PATH, BASE, PAVEMENT, AND DRAINAGE

WIN 13353.10

STP-1335(310)X

TOPSHAM
TOPSHAM TRAILS PHASE I - S

TITLE SHEET

TOWN OF TOPSHAM, MAINE
APPROVED — DATE

STATE OF MAINE — JOSEPH R. HOME — No. 10420 — LICENSED PROFESSIONAL ENGINEER

SIGNATURE — P.E. NUMBER 10420
DATE 6/28/2016

PROJECT INFORMATION

PROGRAM	MULTIMODAL
PROJECT MANAGER	JOHN RODRIGUE
DESIGNER	DARIN W. BRYANT
CONSULTANT	T.Y.LIN INTERNATIONAL
PROJECT RESIDENT	
CONTRACTOR	
PROJECT COMPLETION DATE	

SHEET NUMBER
1
OF 45

Filename: ...\highway\msta\001_Title.dgn Division: HIGHWAY Username: dbryant Date:6/28/2016

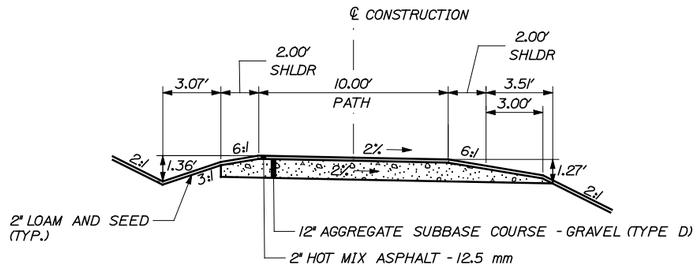

TYPICAL SECTION

STA. 5+50 TO STA. 7+50

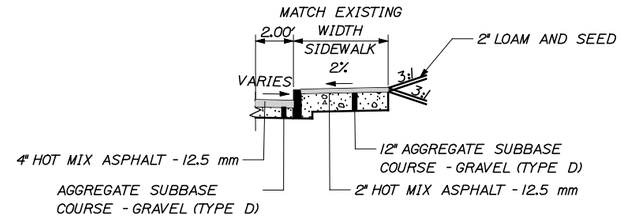

CURB AND SIDEWALK SECTION

NOTES:

1. THE PAVEMENT AND SUBBASE DEPTHS AS SHOWN ON THE PLANS ARE INTENDED TO BE NOMINAL
2. THE STATIONING UNDER EACH TYPICAL IS APPROXIMATE AND INCLUDES TRANSITION AREAS. WIDTHS VARY AS SHOWN IN THE PLANS.
3. THE CROSS SECTIONS ARE SHOWN WITH A 17.5" PAVEMENT STRUCTURE DEPTH. THE ACTUAL DEPTH SHALL BE AS SHOWN IN THE TYPICAL SECTIONS.

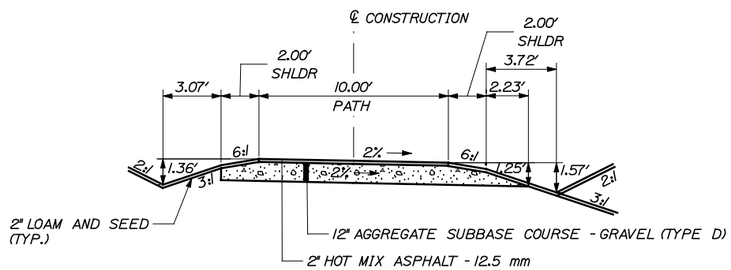

TYPICAL SECTION

STA. 4+32 TO STA. 5+50
STA. 7+50 TO STA. 14+73
STA. 16+32 TO STA. 19+29
STA. 22+11 TO STA. 29+26
STA. 32+95 TO STA. 33+28

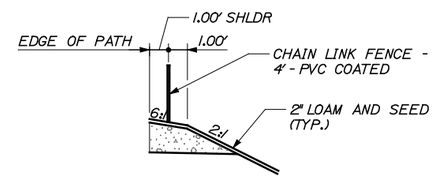

PROTECTIVE FENCE

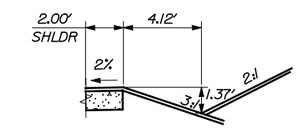

TYPICAL SECTION - HIGH SIDE

STA. 16+50, RT TO STA. 19+00, RT

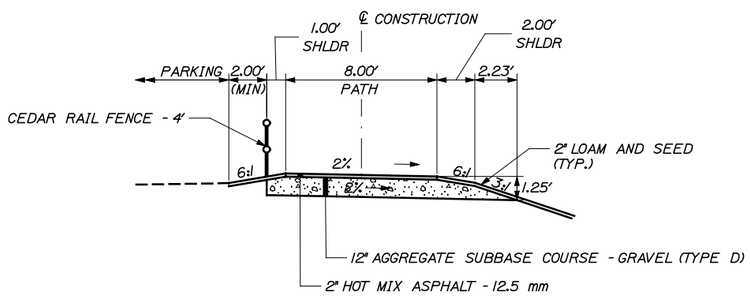

TYPICAL SECTION - REDUCED WIDTH

STA. 0+77 TO STA. 4+32

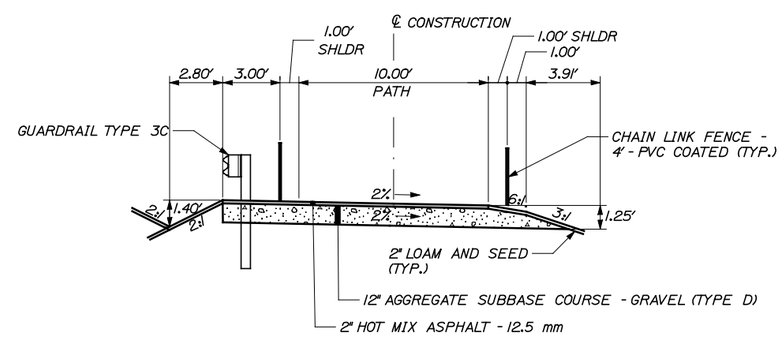

TYPICAL SECTION - GUARDRAIL

STA. 14+73 TO STA. 16+32
STA. 19+29 TO STA. 22+11
STA. 29+26 TO STA. 32+95

TOWN OF TOPSHAM, MAINE

STP-1335(310)X

WIN 13353.10

HIGHWAY PLANS

STATE OF MAINE — JOSEPH R. HOWE — No. 10420 — PROFESSIONAL ENGINEER

PROJ. MANAGER	DWB		
DESIGN-DETAILED	JRH	JJB	2/16
CHECKED-REVIEWED	JRH	DWB	2/16
DESIGN2-DETAILED2			
DESIGN3-DETAILED3			
REVISIONS 1			
REVISIONS 2			
REVISIONS 3			
REVISIONS 4			
FIELD CHANGES			

SIGNATURE

P.E. NUMBER 10420

DATE 6/28/2016

TOPSHAM
TOPSHAM TRAILS PHASE I - S

TYPICAL SECTIONS

SHEET NUMBER

2

OF 45

Filename: ...\highway\msta\002_Typical01.dgn Division: HIGHWAY Username: dbryant Date:6/28/2016

GENERAL NOTES

1. THE UTILITIES INVOLVED IN THIS CONTRACT ARE AS FOLLOWS: CENTRAL MAINE POWER COMPANY, FAIRPOINT COMMUNICATIONS, AND COMCAST.

2. ALL UTILITY FACILITIES SHALL BE ADJUSTED BY THE RESPECTIVE UTILITIES UNLESS OTHERWISE NOTED.

3. CLEARING LIMITS SHALL BE 5' BEYOND AND PARALLEL TO THE CONSTRUCTION SLOPE LINES OR AS SHOWN ON THE PLANS UNLESS OTHERWISE AUTHORIZED BY THE RESIDENT.

4. THE CLEARING AND SELECTIVE CLEARING AND THINNING LINES SHOWN ON THE PLANS ARE FOR ESTIMATING PURPOSES ONLY. THE ACTUAL LINES FOR CLEARING AND THINNING SHALL BE ESTABLISHED IN THE FIELD BY THE CONTRACTOR AND APPROVED BY THE RESIDENT.

5. STUMPS HAVE BEEN ESTIMATED TO BE REMOVED UNDER ITEM 201.24 REMOVE STUMP. HOWEVER, WHERE DIRECTED BY THE RESIDENT, ITEM 631.20 STUMP CHIPPER RENTAL, MAY BE USED TO REMOVE THE STUMPS.

6. GRUBBING IN FILL AREAS HAVE BEEN SHOWN ON THE CROSS SECTIONS AND THE QUANTITIES NOTED. THESE LIMITS ARE APPROXIMATE AND HAVE BEEN USED FOR ESTIMATING PURPOSES ONLY. ACTUAL GRUBBING LIMITS MAY VARY BASED ON FIELD CONDITIONS AS DIRECTED BY THE RESIDENT. ESTIMATED GRUBBING DEPTHS ARE 6 INCHES IN FIELD AREAS AND 12 INCHES IN WOODED AREAS.

7. ALL WASTE MATERIAL NOT USED ON THE PROJECT SHALL BE DISPOSED OF OFF THE PROJECT IN WASTE AREAS APPROVED BY THE RESIDENT.

8. REQUIRED DITCH PROTECTION SHOWN ON THE PLANS OR IN THE CONSTRUCTION NOTES IS FOR ESTIMATING PURPOSES ONLY. THE ACTUAL TYPE AND LOCATION OF DITCH PROTECTION MAY BE ALTERED BY THE RESIDENT.

9. IF FOUNDATION MATERIAL IS REQUIRED UNDER CULVERTS, IT SHALL MEET THE REQUIREMENTS FOR GRANULAR BORROW - UNDERWATER BACKFILL AND WILL BE PAID FOR AS GRANULAR BORROW.

10. GRANULAR BORROW USED TO BACKFILL MUCK EXCAVATION OR IN LOW WET AREAS TO 1 FT ABOVE WATER LEVEL OR OLD GROUND SHALL MEET REQUIREMENTS FOR GRANULAR BORROW UNDERWATER BACKFILL.

11. EXISTING INSLOPES STEEPER THAN 2:1 IN PROPOSED FILL AREAS SHALL BE BENCHED AS DIRECTED BY THE RESIDENT.

12. THE FOLLOWING SHALL BE INCIDENTAL TO THE 603 ITEMS:
    - ANY CUTTING OF EXISTING CULVERTS AND/OR CONNECTORS NECESSARY TO INSTALL NEW CULVERT REPLACEMENTS OR EXTENSIONS
    - ALL PIPE EXCAVATION INCLUDING ANY CUTTING AND REMOVAL OF PAVEMENT
    - ALL DITCHING AT PIPE ENDS
    - FURNISHING, PLACING, GRADING, AND COMPACTING OF ANY NEW GRAVEL AND/OR FILL MATERIAL INCLUDING GRANULAR BORROW USED UNDER PIPES AND FOR TEMPORARY DETOURS TO MAINTAIN TRAFFIC DURING PIPE INSTALLATION (EXCAVATION IS ALSO INCIDENTAL).
    - GRANULAR BORROW UNDER THE PIPE SHALL MEET THE REQUIREMENTS FOR UNDERWATER BACKFILL
    - ALL WORK NECESSARY TO CONNECT TO EXISTING PIPES AND DRAINAGE STRUCTURES

13. EXISTING CULVERTS TO REMAIN SHALL BE CLEANED AS DIRECTED BY THE RESIDENT. PAYMENT WILL BE MADE UNDER ITEM 631.32 - CULVERT CLEANER (INCLUDING OPERATOR).

14. EXISTING CULVERTS AND CATCH BASINS WILL BE CLEANED AS DIRECTED BY THE RESIDENT UNDER THE APPROPRIATE PAY ITEMS.

15. NO EXISTING DRAINAGE SHALL BE ABANDONED, REMOVED OR PLUGGED WITHOUT PRIOR APPROVAL OF THE RESIDENT.

16. INLETS AND OUTLETS OF ALL CULVERTS SHALL BE RIPRAPPED IN ACCORDANCE WITH STANDARD DETAIL 802(05) UNLESS OTHERWISE NOTED ON THE PLANS OR DIRECTED BY THE RESIDENT.

17. ANY NECESSARY CUTTING OF EXISTING PIPES TO FIT IN AREAS OF PROPOSED CATCH BASINS WILL NOT BE PAID FOR SEPARATELY AND WILL BE CONSIDERED INCIDENTAL TO ITEM 604.

18. ANY NECESSARY CUTTING OF EXISTING CATCH BASINS TO ALLOW FOR PROPOSED PIPE CONNECTIONS WILL NOT BE PAID FOR SEPARATELY AND WILL BE CONSIDERED INCIDENTAL TO ITEM 603 OR 605.

19. EXISTING ABANDONED WATER MAINS BROKEN BY THE CONTRACTOR DURING CONSTRUCTION SHALL HAVE ENDS PLUGGED WITH BRICK AND MORTAR. COST FOR ALL LABOR AND MATERIAL WILL BE CONSIDERED INCIDENTAL TO THE CONTRACT AND NO DIRECT PAYMENT WILL BE MADE.

20. A DELINEATOR POST (ITEM 606.35) WILL BE INSTALLED AT EACH UNDERDRAIN OUTLET.

21. IN AREAS WHERE CURB TYPE 1 WILL BE RESET, THE EXISTING CURB SUITABLE FOR USE AS TERMINAL ENDS SHALL BE CUT IF NECESSARY AND UTILIZED AS SUCH AND PAID FOR UNDER ITEM 609.38 (RESET CURB TYPE 1).

22. BACKING UP BITUMINOUS CURB IS INCIDENTAL TO THE CURB ITEMS. IN AREAS WHERE NEW BITUMINOUS CURB IS DESIGNATED TO REPLACE EXISTING, THE REMOVAL OF THE OLD BITUMINOUS CURB SHALL BE INCIDENTAL TO THE NEW CURB.

23. LOAM OR EROSION CONTROL MIX HAS BEEN ESTIMATED FOR DISTURBED AREAS. ACTUAL PLACEMENT OF THE LOAM OR EROSION CONTROL MIX SHALL BE AS NOTED ON THE PLANS OR DESIGNATED BY THE RESIDENT.

24. UNLESS OTHERWISE NOTED SEEDING METHOD NO. 1 SHALL BE UTILIZED ON ALL LAWNS AND DEVELOPED AREAS; SEEDING METHOD NO. 2 SHALL BE UTILIZED ON ALL NON-GUARDRAIL SLOPES. SEEDING METHOD NO. 3 SHALL BE UTILIZED ON ALL GUARDRAIL FILL SLOPES. ON LONG NON-GUARDRAIL BACKSLOPES, SEEDING METHOD NO. 3 MAY BE USED INSTEAD OF METHOD NO. 2 IF NOTED OR DIRECTED BY THE RESIDENT.

25. LOAM SHALL BE PLACED A NOMINAL DEPTH OF 4 INCHES IN LAWN AREAS AND 2 INCHES IN ALL OTHER AREAS UNLESS OTHERWISE NOTED OR DIRECTED.

26. EROSION CONTROL MIX SHALL BE PLACED TO A MINIMUM NOMINAL DEPTH OF 4 INCHES.

27. ANY DAMAGE TO THE SLOPES CAUSED BY THE CONTRACTOR'S EQUIPMENT, PERSONNEL, OR OPERATION SHALL BE REPAIRED TO THE SATISFACTION OF THE RESIDENT. ALL WORK, EQUIPMENT, AND MATERIALS REQUIRED TO MAKE REPAIRS SHALL BE AT THE CONTRACTOR'S EXPENSE.

28. THE FILL QUANTITY SHOWN ON THE CROSS SECTIONS INCLUDES THE WASTE STORAGE.

29. AREAS REQUIRING FILL ON THE PROJECT WILL COME FROM SUITABLE EXCAVATION FROM EXCAVATION AREAS.

30. ESTIMATED QUANTITIES FOR REQUIRED STRUCTURAL EARTH EXCAVATION, DRAINAGE, AND MINOR STRUCTURES ARE INFORMATIONAL ONLY AND REPRESENT THE APPROXIMATE MINIMUM QUANTITY REQUIRED TO INSTALL DRAINAGE STRUCTURES. ADDITIONAL EXCAVATION FOR THE CONTRACTOR'S CONVENIENCE OR TO COMPLY WITH BACKSLOPING REQUIREMENTS WILL NOT BE PAID FOR DIRECTLY BUT WILL BE CONSIDERED INCIDENTAL TO THE RELATED DRAINAGE ITEMS.

31. NO SEPARATE PAYMENT FOR SUPERINTENDENT OR FOREMAN WILL BE MADE FOR THE SUPERVISION OF EQUIPMENT BEING PAID FOR UNDER THE EQUIPMENT RENTAL ITEMS.

32. "UNDETERMINED LOCATIONS" SHALL BE DETERMINED BY THE RESIDENT.

33. STATIONS REFERENCED ARE APPROXIMATE.

34. ALL WORK SHALL BE DONE IN ACCORDANCE WITH THE MAINE DEPARTMENT OF TRANSPORTATION'S BEST MANAGEMENT PRACTICES FOR EROSION CONTROL & SEDIMENT CONTROL, FEBRUARY, 2008.

35. ALL PEDESTRIAN RAMPS AT CROSSWALKS SHALL HAVE DETECTABLE WARNING FIELDS INSTALLED.

36. FIXED OBJECTS SHALL BE AT LEAST 3' BEYOND THE EDGE OF PATH UNLESS OTHERWISE SPECIFIED IN THESE PLANS. A MINIMUM VERTICAL CLEARANCE OF 8' SHALL BE PROVIDED FOR THE ENTIRE PAVEMENT WIDTH.

TOWN OF TOPSHAM, MAINE

STP-1335(310)X

WIN 13353.10

HIGHWAY PLANS

STATE OF MAINE JOSEPH R. HOWE No. 10420 PROFESSIONAL ENGINEER

Joseph R. Howe

SIGNATURE

10420

P.E. NUMBER

6/28/2016

DATE

		BY	DATE
PROJ. MANAGER	DWB		
DESIGN-DETAILED	JRH	JJB	2/16
CHECKED-REVIEWED	JRH	DWB	2/16
DESIGN2-DETAILED2			
DESIGN3-DETAILED3			
REVISIONS 1			
REVISIONS 2			
REVISIONS 3			
REVISIONS 4			
FIELD CHANGES			

TOPSHAM

TOPSHAM TRAILS PHASE I - S

GENERAL NOTES

Filename: ...\highway\msta\006_GenNotes.dgn Division: HIGHWAY Username: dbryant Date:6/28/2016

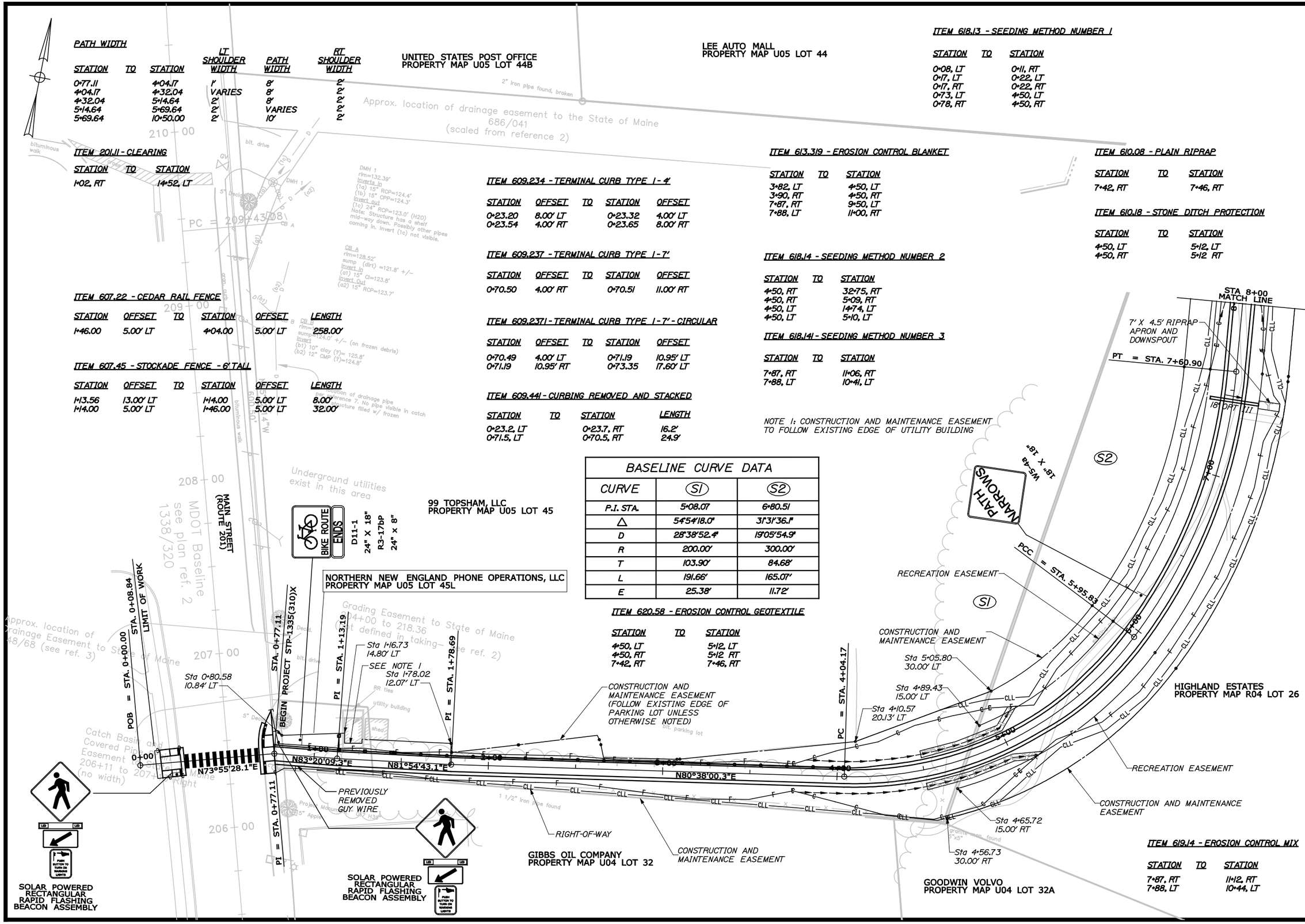

PATH WIDTH

STATION	TO	STATION	LT SHOULDER WIDTH	PATH WIDTH	RT SHOULDER WIDTH
0+77.11		4+04.17	1'	8'	2'
4+04.17		4+32.04	VARIES	8'	2'
4+32.04		5+14.64	2'	8'	2'
5+14.64		5+69.64	2'	VARIES	2'
5+69.64		10+50.00	2'	10'	2'

ITEM 201.11 - CLEARING

STATION	TO	STATION
1+02, RT		14+52, LT

ITEM 607.22 - CEDAR RAIL FENCE

STATION	OFFSET	TO	STATION	OFFSET	LENGTH
1+46.00	5.00' LT		4+04.00	5.00' LT	258.00'

ITEM 607.45 - STOCKADE FENCE - 6' TALL

STATION	OFFSET	TO	STATION	OFFSET	LENGTH
1+13.56	13.00' LT		1+14.00	5.00' LT	8.00'
1+14.00	5.00' LT		1+46.00	5.00' LT	32.00'

ITEM 609.234 - TERMINAL CURB TYPE 1 - 4'

STATION	OFFSET	TO	STATION	OFFSET
0+23.20	8.00' LT		0+23.32	4.00' LT
0+23.54	4.00' RT		0+23.65	8.00' RT

ITEM 609.237 - TERMINAL CURB TYPE 1 - 7'

STATION	OFFSET	TO	STATION	OFFSET
0+70.50	4.00' RT		0+70.51	11.00' RT

ITEM 609.2371 - TERMINAL CURB TYPE 1 - 7' - CIRCULAR

STATION	OFFSET	TO	STATION	OFFSET
0+70.49	4.00' LT		0+71.19	10.95' LT
0+71.19	10.95' RT		0+73.35	17.60' LT

ITEM 609.441 - CURBING REMOVED AND STACKED

STATION	TO	STATION	LENGTH
0+23.2, LT		0+23.7, RT	16.2'
0+71.5, LT		0+70.5, RT	24.9'

BASELINE CURVE DATA

CURVE	S1	S2
P.I. STA.	5+08.07	6+80.51
Δ	54°54'18.0"	31°31'36.1"
D	28°38'52.4"	19°05'54.9"
R	200.00'	300.00'
T	103.90'	84.68'
L	191.66'	165.07'
E	25.38'	11.72'

ITEM 620.58 - EROSION CONTROL GEOTEXTILE

STATION	TO	STATION
4+50, LT		5+12, LT
4+50, RT		5+12 RT
7+42, RT		7+46, RT

ITEM 618.13 - SEEDING METHOD NUMBER 1

STATION	TO	STATION
0+08, LT		0+11, RT
0+17, LT		0+22, LT
0+17, RT		0+22, RT
0+73, LT		4+50, LT
0+78, RT		4+50, RT

ITEM 613.319 - EROSION CONTROL BLANKET

STATION	TO	STATION
3+82, LT		4+50, LT
3+90, RT		4+50, RT
7+87, RT		9+50, LT
7+88, LT		11+00, RT

ITEM 618.14 - SEEDING METHOD NUMBER 2

STATION	TO	STATION
4+50, RT		32+75, RT
4+50, RT		5+09, RT
4+50, LT		14+74, LT
4+50, LT		5+10, LT

ITEM 618.141 - SEEDING METHOD NUMBER 3

STATION	TO	STATION
7+87, RT		11+06, RT
7+88, LT		10+41, LT

NOTE 1: CONSTRUCTION AND MAINTENANCE EASEMENT TO FOLLOW EXISTING EDGE OF UTILITY BUILDING

ITEM 610.08 - PLAIN RIPRAP

STATION	TO	STATION
7+42, RT		7+46, RT

ITEM 610.18 - STONE DITCH PROTECTION

STATION	TO	STATION
4+50, LT		5+12, LT
4+50, RT		5+12 RT

ITEM 619.14 - EROSION CONTROL MIX

STATION	TO	STATION
7+87, RT		11+12, RT
7+88, LT		10+44, LT

TOWN OF TOPSHAM, MAINE

STP-1335(310)X

WIN 13353.10

HIGHWAY PLANS

STATE OF MAINE — JOSEPH R. HOWE No. 10420 — PROFESSIONAL ENGINEER

SIGNATURE	Joseph R. Howe
P.E. NUMBER	10420
DATE	6/28/2016

	BY	DATE
PROJ. MANAGER	DWB	
DESIGN-DETAILED	JRH	7/10
CHECKED-REVIEWED	JRH	2/16
DESIGN2-DETAILED2	DWB	
DESIGN3-DETAILED3		
REVISIONS 1		
REVISIONS 2		
REVISIONS 3		
REVISIONS 4		
FIELD CHANGES		

TOPSHAM
TOPSHAM TRAILS PHASE I - S

PLANS

SHEET NUMBER

4

OF 45

Filename: ...\highway\msta\007_HDPlan01.dgn Division: HIGHWAY Username: dbryant Date:6/28/2016

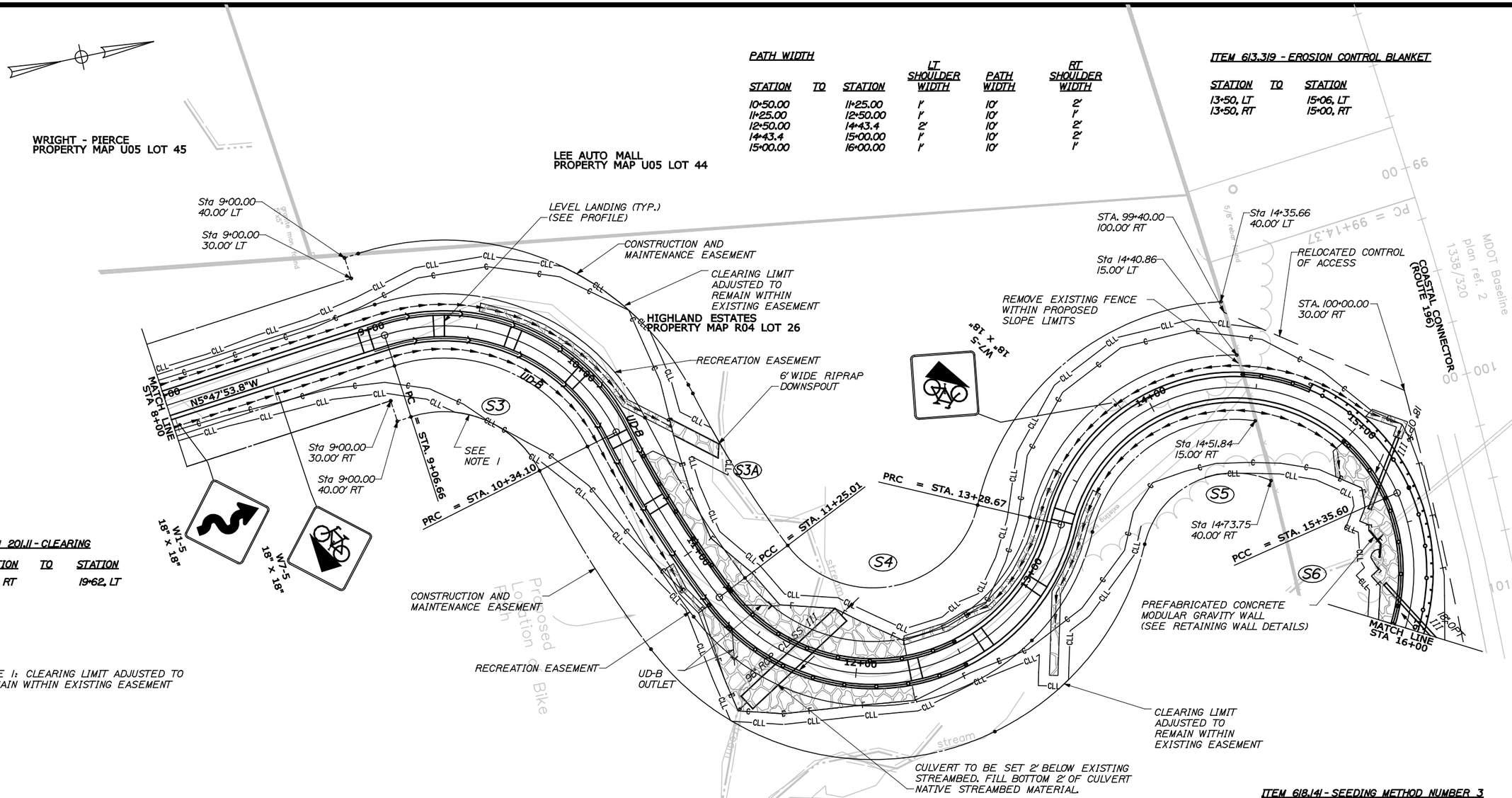

PATH WIDTH

STATION	TO	STATION	LT SHOULDER WIDTH	PATH WIDTH	RT SHOULDER WIDTH
10+50.00		11+25.00	1'	10'	2'
11+25.00		12+50.00	1'	10'	1'
12+50.00		14+43.4	2'	10'	2'
14+43.4		15+00.00	1'	10'	2'
15+00.00		16+00.00	1'	10'	1'

ITEM 613.319 - EROSION CONTROL BLANKET

STATION	TO	STATION
13+50, LT		15+06, LT
13+50, RT		15+00, RT

ITEM 201.11 - CLEARING

STATION	TO	STATION
14+14, RT		19+62, LT

NOTE 1: CLEARING LIMIT ADJUSTED TO REMAIN WITHIN EXISTING EASEMENT

ITEM 606.232 - GUARDRAIL TYPE 3o - OVER 15' RADIUS

STATION	OFFSET	TO	STATION	OFFSET	RADIUS	LENGTH
14+73.61	9.00' LT		15+35.60	9.00' LT	92.00'	68.75'
15+35.60	9.00' LT		16+32.40	9.00' LT	92.00'	100.48'

ITEM 606.265 - TERMINAL END - SINGLE RAIL - GALVANIZED STEEL

STATION	OFFSET
14+73.61	9.00' LT

ITEM 607.163 - CHAIN LINK FENCE - 4 FT - PVC COATED

STATION	OFFSET	TO	STATION	OFFSET	LENGTH
10+50.00	6.00' LT		12+50.00	6.00' LT	190.77'
11+25.00	6.00' RT		12+50.00	6.00' RT	133.33'
14+43.6	6.0' LT		32+94.57	6.0' LT	1861.34
15+00.00	6.00' RT		16+00.00	6.00' RT	93.14'

ITEM 610.08 - PLAIN RIPRAP

STATION	TO	STATION
10+40, LT		10+69, LT
10+50, LT		12+25, LT
11+25, RT		12+25, RT
15+00, RT		16+00, RT

ITEM 610.18 - STONE DITCH PROTECTION

STATION	TO	STATION
9+50, LT		10+44, LT
11+00, RT		11+25, RT
12+25, LT		13+50, LT
12+63, RT		13+50, RT
15+00, LT		15+15, LT

ITEM 618.141 - SEEDING METHOD NUMBER 3

STATION	TO	STATION
12+75, LT		16+31, LT
12+90, RT		15+11, RT

ITEM 619.14 - EROSION CONTROL MIX

STATION	TO	STATION
12+75, LT		16+31, LT
12+90, RT		15+11, RT

ITEM 620.58 - EROSION CONTROL GEOTEXTILE

STATION	TO	STATION
9+50, LT		10+44, LT
10+40, LT		10+69, LT
10+50, LT		12+25, LT
11+00, RT		11+25, RT
11+25, RT		12+25, RT
12+63, LT		13+50, LT
12+88, RT		13+50, RT
15+00, LT		15+15, LT
15+00, RT		16+00, RT

BASELINE CURVE DATA

CURVE	S3	S3A	S4	S5	S6
P.I. STA.	9+83.70	10+79.68	13+16.50	15+75.66	15+89.28
Δ	81°07'48.4"	10°25'04.1"	129°39'08.0"	142°51'02.1"	61°37'27.0"
D	63°39'43.1"	11°27'33.0"	63°39'43.1"	69°01'51.8"	63°39'43.1"
R	90.00'	500.00'	90.00'	83.00'	90.00'
T	77.04'	45.58'	191.49'	246.99'	53.68'
L	127.44'	90.91'	203.66'	206.94'	96.80'
E	28.41'	2.07'	121.58'	177.56'	14.79'

TOWN OF
TOPSHAM, MAINE

STP-1336(310)X

WIN
13353.10

HIGHWAY PLANS

STATE OF MAINE
JOSEPH R. HOWE
No. 10420
PROFESSIONAL ENGINEER

Joseph R. Howe
SIGNATURE

10420
P.E. NUMBER

6/28/2016
DATE

PROJ. MANAGER	DWB		
DESIGN-DETAILED	JRH	JJB	7/10
CHECKED-REVIEWED	JRH	DWB	2/16
DESIGN2-DETAILED2			
DESIGN3-DETAILED3			
REVISIONS 1			
REVISIONS 2			
REVISIONS 3			
REVISIONS 4			
FIELD CHANGES			

TOPSHAM
TOPSHAM TRAILS PHASE I - S

PLANS

SHEET NUMBER
5
OF 45

Filename: ...\highway\nsta\007_HDPlan02.dgn Division: HIGHWAY Username: dbryant Date:6/28/2016

PATH WIDTH

STATION	TO	STATION	LT SHOULDER WIDTH	PATH WIDTH	RT SHOULDER WIDTH
16+00.00		19+50.00	1'	10'	2'
19+50.00		21+50.00	1'	10'	2'
21+50.00		32+94.57	1'	10'	2'

ITEM 201.11 - CLEARING

STATION	TO	STATION
19+88, RT		20+44, RT
20+64, RT		20+93, RT
21+08, RT		32+89, RT

ITEM 618.141 - SEEDING METHOD NUMBER 3

STATION	TO	STATION
16+12, RT		19+50, RT
16+22, LT		32+94, LT
21+11, RT		23+12, RT

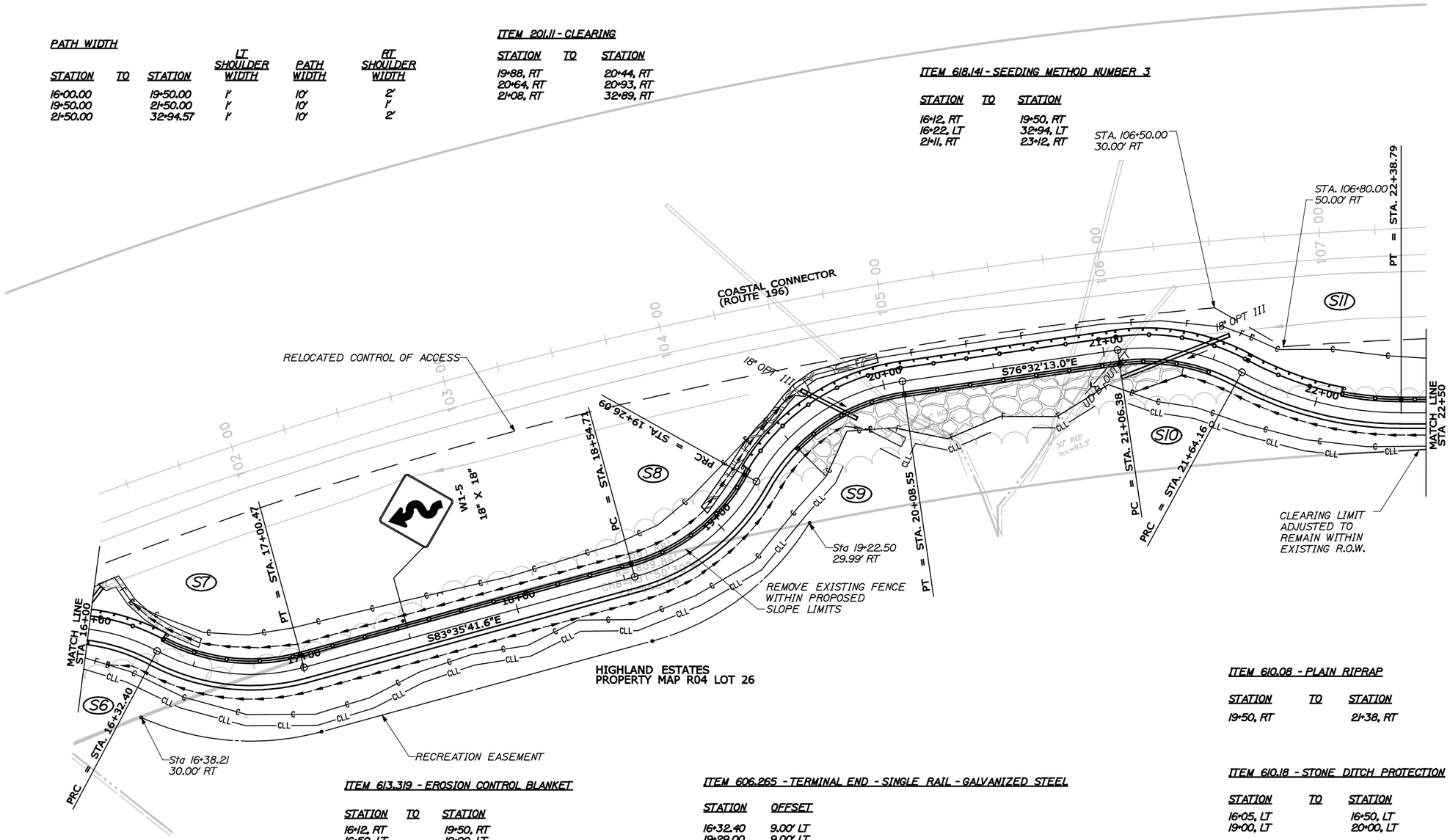

ITEM 613.319 - EROSION CONTROL BLANKET

STATION	TO	STATION
16+12, RT		19+50, RT
16+50, LT		19+00, LT
21+38, RT		26+30, RT

ITEM 606.265 - TERMINAL END - SINGLE RAIL - GALVANIZED STEEL

STATION	OFFSET
16+32.40	9.00' LT
19+29.00	9.00' LT
22+10.70	9.00' LT

ITEM 606.23 - GUARDRAIL TYPE 3a - SINGLE RAIL

STATION	OFFSET	TO	STATION	OFFSET	LENGTH
20+08.54	9.00' LT		21+06.38	9.00' LT	97.84'

ITEM 606.232 - GUARDRAIL TYPE 3a - OVER 15' RADIUS

STATION	OFFSET	TO	STATION	OFFSET	RADIUS	LENGTH
19+29.00	9.00' LT		20+08.54	9.00' LT	99.00'	87.50'
21+06.38	9.00' LT		21+64.15	9.00' LT	99.00'	63.55'
21+64.15	9.00' LT		22+10.70	9.00' LT	141.00'	43.75'

ITEM 607.163 - CHAIN LINK FENCE - 4 FT - PVC COATED

STATION	OFFSET	TO	STATION	OFFSET	LENGTH
19+50.00	6.00' RT		21+50.00	6.00' RT	193.19'

ITEM 610.08 - PLAIN RIPRAP

STATION	TO	STATION
19+50, RT		21+38, RT

ITEM 610.18 - STONE DITCH PROTECTION

STATION	TO	STATION
16+05, LT		16+50, LT
19+00, LT		20+00, LT

ITEM 619.14 - EROSION CONTROL MIX

STATION	TO	STATION
16+12, RT		19+50, RT
16+25, LT		26+48, LT
21+11, RT		23+12, RT

ITEM 620.58 - EROSION CONTROL GEOTEXTILE

STATION	TO	STATION
16+05, LT		16+50, LT
19+00, LT		20+00, LT
19+50, RT		21+38, RT

BASELINE CURVE DATA

CURVE	S6	S7	S8	S9	S10	S11
P.I. STA.	15+89.28	16+68.16	18+92.39	19+70.47	21+36.31	22+02.26
Δ	61°37'27.0"	43°19'53.1"	45°26'26.2"	52°29'54.8"	36°46'54.1"	28°30'18.4"
D	63°39'43.1"	63°39'43.1"	63°39'43.1"	63°39'43.1"	63°39'43.1"	38°11'49.9"
R	90.00'	90.00'	90.00'	90.00'	90.00'	150.00'
T	53.68'	35.75'	37.69'	44.38'	29.92'	38.10'
L	96.80'	68.06'	71.38'	82.46'	57.78'	74.63'
E	14.79'	6.84'	7.57'	10.35'	4.84'	4.76'

TOWN OF TOPSHAM, MAINE

STP-1335(310)X

WIN 13353.10

HIGHWAY PLANS

STATE OF MAINE JOSEPH R. HOME No. 10420 PROFESSIONAL ENGINEER

SIGNATURE	Joseph R. Home
P.E. NUMBER	10420
DATE	6/28/2016

	BY	DATE
PROJ. MANAGER DWB		
DESIGN-DETAILED JRH	JJB	2/16
CHECKED-REVIEWED JRH	DWB	2/16
DESIGN2-DETAILED2		
DESIGN3-DETAILED3		
REVISIONS 1		
REVISIONS 2		
REVISIONS 3		
REVISIONS 4		
FIELD CHANGES		

TOPSHAM TRAILS PHASE I - S

PLANS

SHEET NUMBER

6

OF 45

Filename: ...\highway\msta\007_HDPlan03.dgn Division: HIGHWAY Username: dbryant Date:6/28/2016

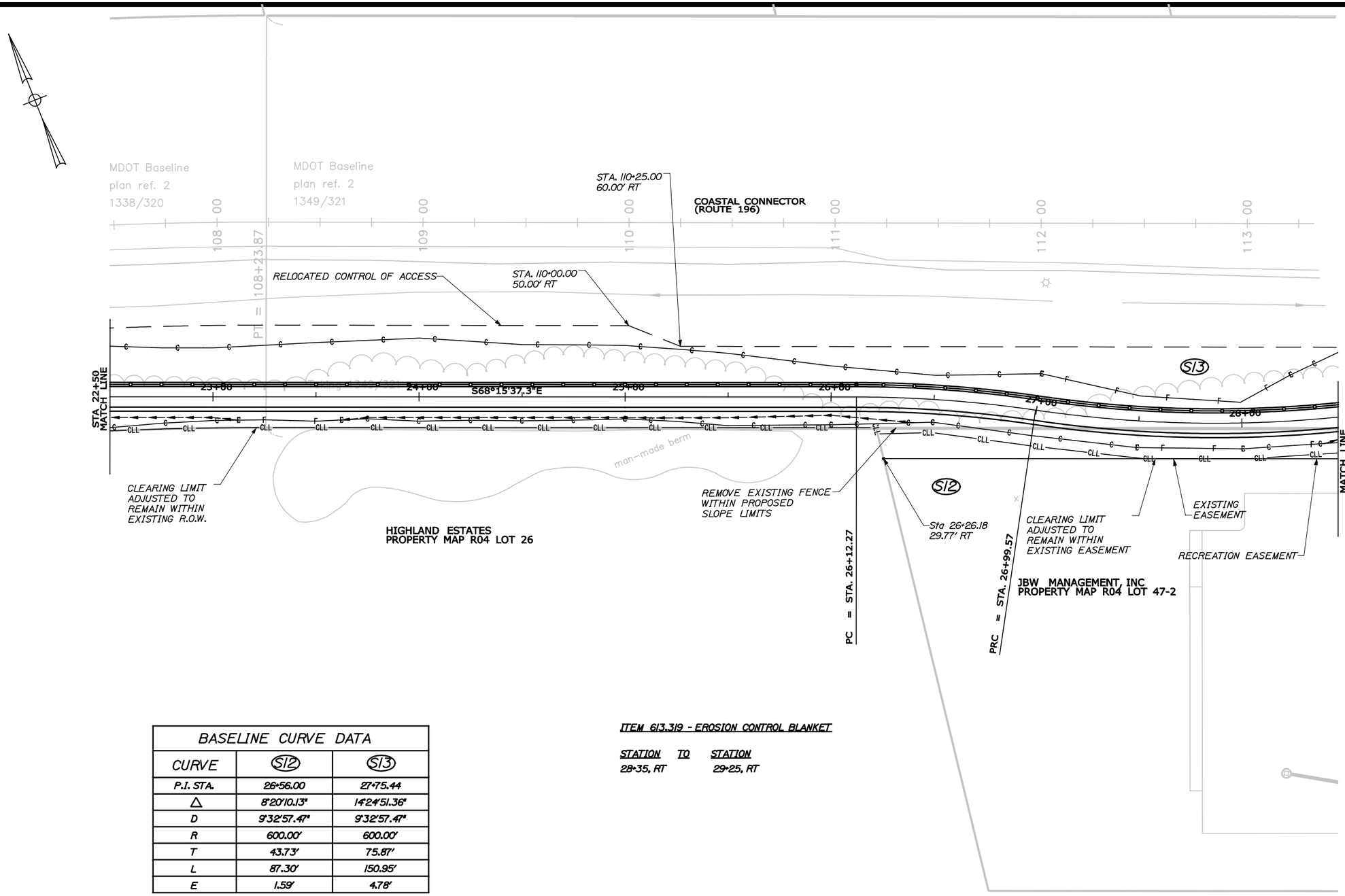

BASELINE CURVE DATA		
CURVE	S12	S13
P.I. STA.	26+56.00	27+75.44
Δ	8°20'10.13"	14°24'51.36"
D	9°32'57.47"	9°32'57.47"
R	600.00'	600.00'
T	43.73'	75.87'
L	87.30'	150.95'
E	1.59'	4.78'

ITEM 613.319 - EROSION CONTROL BLANKET

STATION	TO	STATION
28+35, RT		29+25, RT

TOWN OF
TOPSHAM, MAINE

STP-1335(310)X

WIN
13353.10

HIGHWAY PLANS

STATE OF MAINE
JOSEPH R. HOWE
No. 10420
PROFESSIONAL ENGINEER

SIGNATURE	10420
P.E. NUMBER	
DATE	6/28/2016

PROJ. MANAGER	DWB		
		BY	DATE
DESIGN-DETAILED	JRH	JJB	2/16
CHECKED-REVIEWED	JRH	JRH	2/16
DESIGN2-DETAILED2		DWB	
DESIGN3-DETAILED3			
REVISIONS 1			
REVISIONS 2			
REVISIONS 3			
REVISIONS 4			
FIELD CHANGES			

TOPSHAM
TOPSHAM TRAILS PHASE I - S

PLANS

SHEET NUMBER
7
OF 45

Filename: ...\highway\msta\007_HDPlan04.dgn Division: HIGHWAY Username: dbryant Date:6/28/2016

BASELINE CURVE DATA			
CURVE	S14	S15	S16
P.I. STA.	29+52.13	31+66.24	32+98.31
Δ	11°36'15.5"	12°54'25.0"	22°32'04.4"
D	5°43'46.5"	5°43'46.5"	57°17'44.8"
R	1000.00'	1000.00'	100.00'
T	101.61	113.11	19.92
L	202.53	225.27	39.33
E	5.15	6.38	1.97

PATH WIDTH

STATION	TO	STATION	LT SHOULDER WIDTH	PATH WIDTH	RT SHOULDER WIDTH
32+94.57		33+28.29	2'	10'	2'

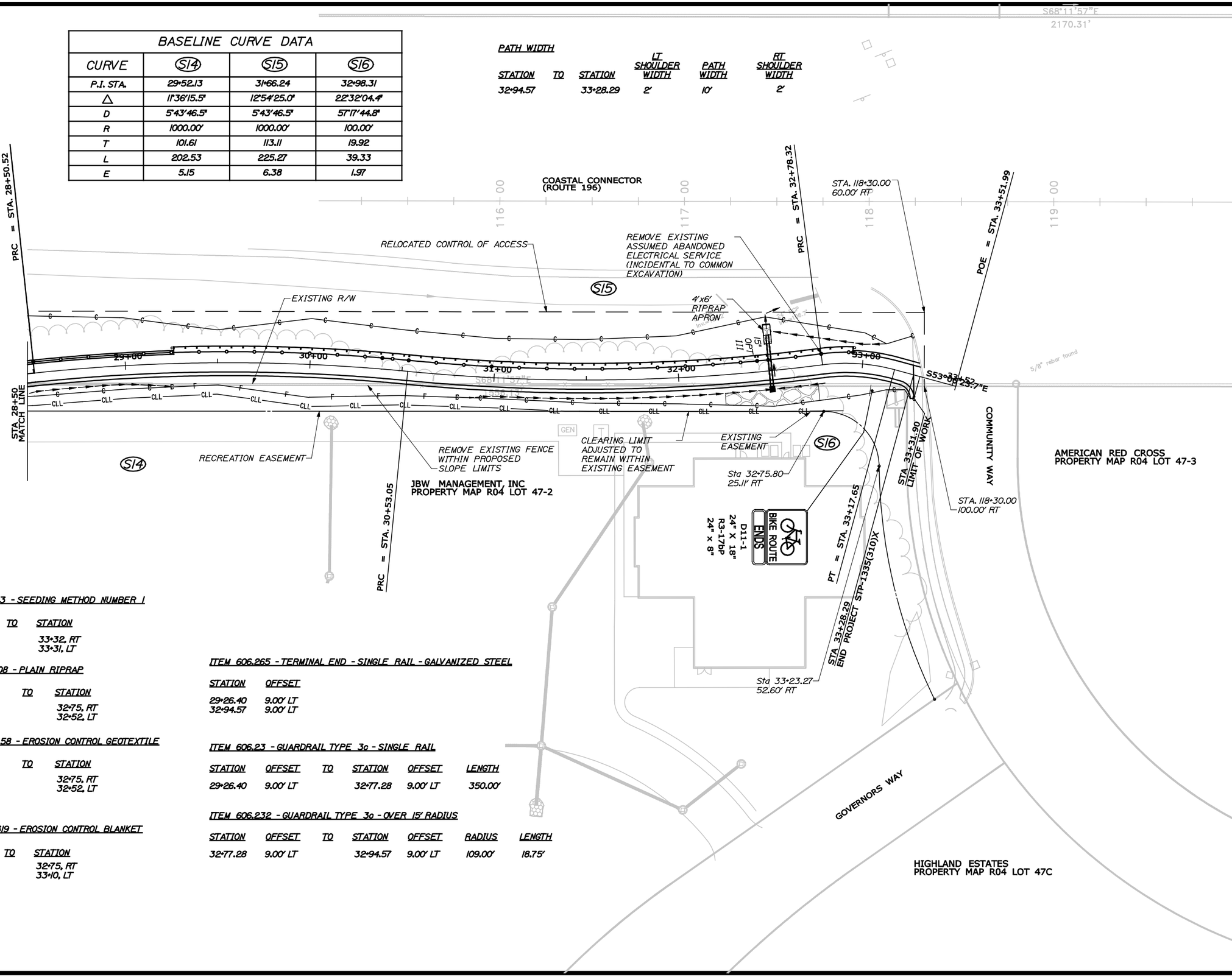

ITEM 618.13 - SEEDING METHOD NUMBER 1

STATION	TO	STATION
32+75, RT		33+32, RT
32+94, LT		33+31, LT

ITEM 610.08 - PLAIN RIPRAP

STATION	TO	STATION
32+25, RT		32+75, RT
32+48, LT		32+52, LT

ITEM 620.58 - EROSION CONTROL GEOTEXTILE

STATION	TO	STATION
32+25, RT		32+75, RT
32+48, LT		32+52, LT

ITEM 613.319 - EROSION CONTROL BLANKET

STATION	TO	STATION
30+85, RT		32+75, RT
32+52, LT		33+10, LT

ITEM 606.265 - TERMINAL END - SINGLE RAIL - GALVANIZED STEEL

STATION	OFFSET
29+26.40	9.00' LT
32+94.57	9.00' LT

ITEM 606.23 - GUARDRAIL TYPE 3c - SINGLE RAIL

STATION	OFFSET	TO	STATION	OFFSET	LENGTH
29+26.40	9.00' LT		32+77.28	9.00' LT	350.00'

ITEM 606.232 - GUARDRAIL TYPE 3c - OVER 15' RADIUS

STATION	OFFSET	TO	STATION	OFFSET	RADIUS	LENGTH
32+77.28	9.00' LT		32+94.57	9.00' LT	109.00'	18.75'

TOWN OF TOPSHAM, MAINE

STP-1335(310)X

WIN 13353.10

HIGHWAY PLANS

STATE OF MAINE — JOSEPH R. HOWE No. 10420 — PROFESSIONAL ENGINEER

SIGNATURE	Joseph R. Howe
P.E. NUMBER	10420
DATE	6/28/2016

		BY	DATE
PROJ. MANAGER	DWB		
DESIGN-DETAILED	JRH	JJB	2/16
CHECKED-REVIEWED	JRH	DWB	2/16
DESIGN2-DETAILED2			
DESIGN3-DETAILED3			
REVISION 1			
REVISION 2			
REVISION 3			
REVISION 4			
FIELD CHANGES			

TOPSHAM TRAILS PHASE I - S

TOPSHAM

PLANS

SHEET NUMBER

8

OF 45

Filename: ...\highway\msta\007_HDPlan05.dgn Division: HIGHWAY Username: dbryant Date:6/28/2016

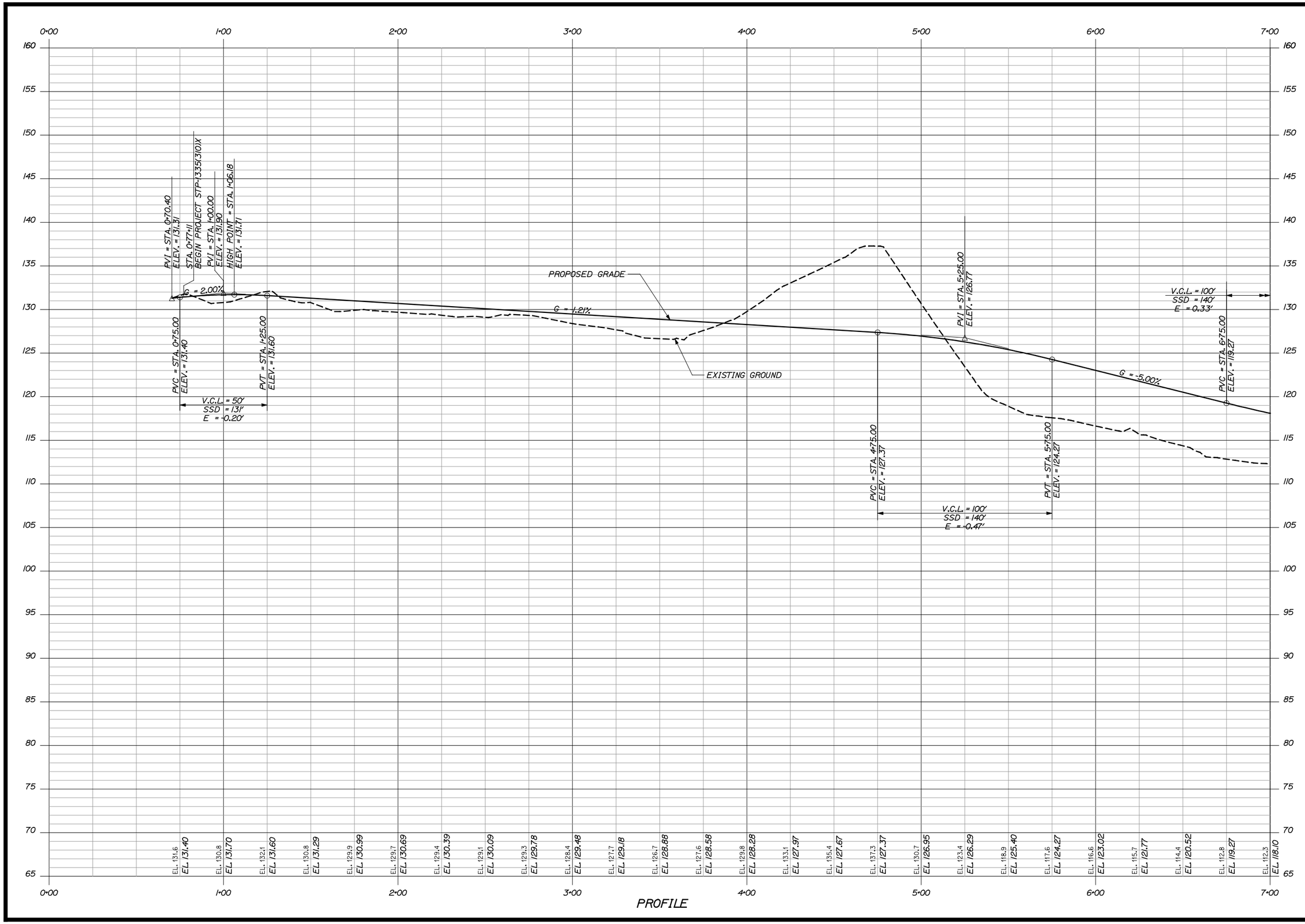

Filename: ...\msta\008_HDProfile01.dgn Division: HIGHWAY Username: dbryant Date:6/28/2016

TOWN OF
TOPSHAM, MAINE

STP-1335(310)X

WIN
13353.10

HIGHWAY PLANS

STATE OF MAINE
JOSEPH R. HOWE
No. 10420
PROFESSIONAL ENGINEER

Joseph R. Howe
SIGNATURE

10420
P.E. NUMBER

6/28/2016
DATE

PROJ. MANAGER	DWB		
DESIGN-DETAILED	JRH	JJB	2/16
CHECKED-REVIEWED	JRH	DWB	2/16
DESIGN2-DETAILED2			
DESIGN3-DETAILED3			
REVISIONS 1			
REVISIONS 2			
REVISIONS 3			
REVISIONS 4			
FIELD CHANGES			

TOPSHAM
TOPSHAM TRAILS PHASE I - S

PROFILES

SHEET NUMBER
9
OF 45

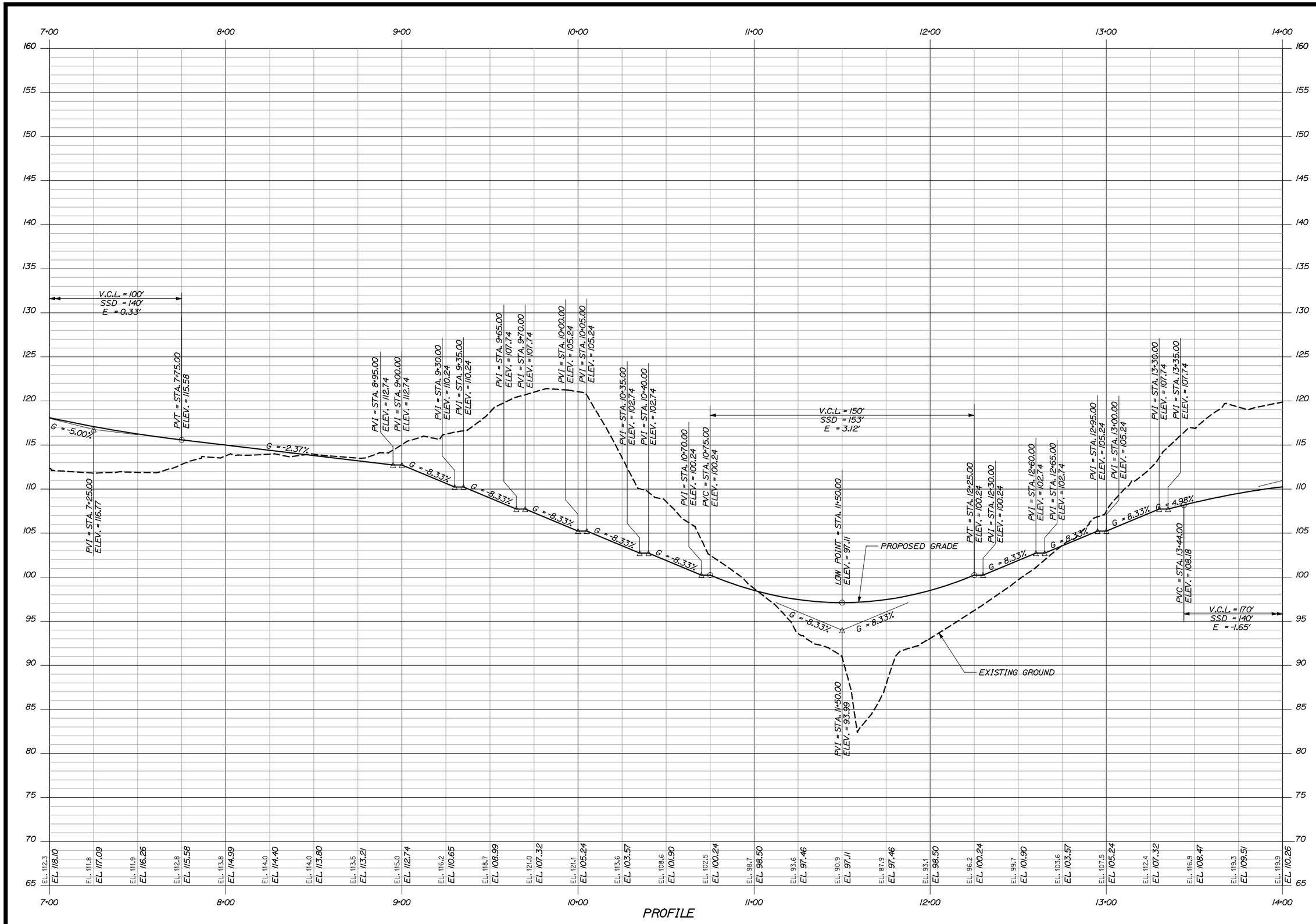

Filename: ...\msta\008_HDProfile02.dgn Division: HIGHWAY Username: dbryant Date:6/28/2016

TOWN OF
TOPSHAM, MAINE

STP-1335(310)X

WIN
13353.10

HIGHWAY PLANS

STATE OF MAINE
JOSEPH R. HOWE
No. 10420
PROFESSIONAL ENGINEER

Joseph R. Howe
SIGNATURE

10420
P.E. NUMBER

6/28/2016
DATE

	BY	DATE
PROJ. MANAGER	DWB	
DESIGN-DETAILED	JRH	2/16
CHECKED-REVIEWED	JRH	2/16
DESIGN2-DETAILED2		
DESIGN3-DETAILED3		
REVISIONS 1		
REVISIONS 2		
REVISIONS 3		
REVISIONS 4		
FIELD CHANGES		

TOPSHAM
TOPSHAM TRAILS PHASE I - S

PROFILES

SHEET NUMBER
10
OF 45

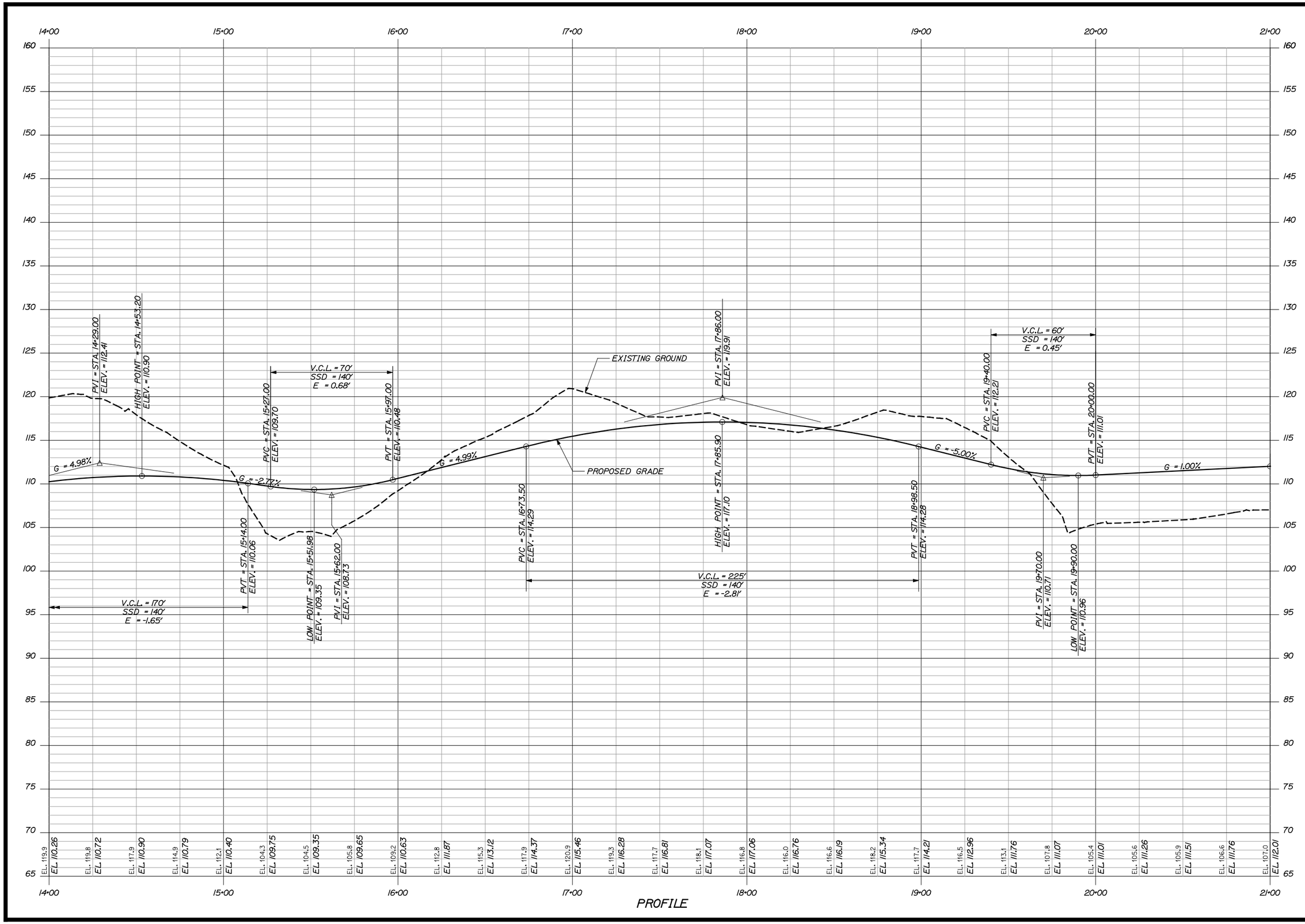

Filename: ...\msta\008_HDProfile03.dgn Division: HIGHWAY Username: dbryant Date:6/28/2016

TOWN OF
TOPSHAM, MAINE

STP-1335(310)X

WIN
13353.10

HIGHWAY PLANS

STATE OF MAINE
JOSEPH R. HOWE
No. 10420
PROFESSIONAL ENGINEER

PROJ. MANAGER	DWB	BY	DATE
DESIGN-DETAILED	JRH	JJB	2/16
CHECKED-REVIEWED	JRH	DWB	2/16
DESIGN2-DETAILED2			
DESIGN3-DETAILED3			
REVISIONS 1			
REVISIONS 2			
REVISIONS 3			
REVISIONS 4			
FIELD CHANGES			

SIGNATURE

10420
P.E. NUMBER

6/28/2016
DATE

TOPSHAM
TOPSHAM TRAILS PHASE I - S

PROFILES

SHEET NUMBER
11
OF 45

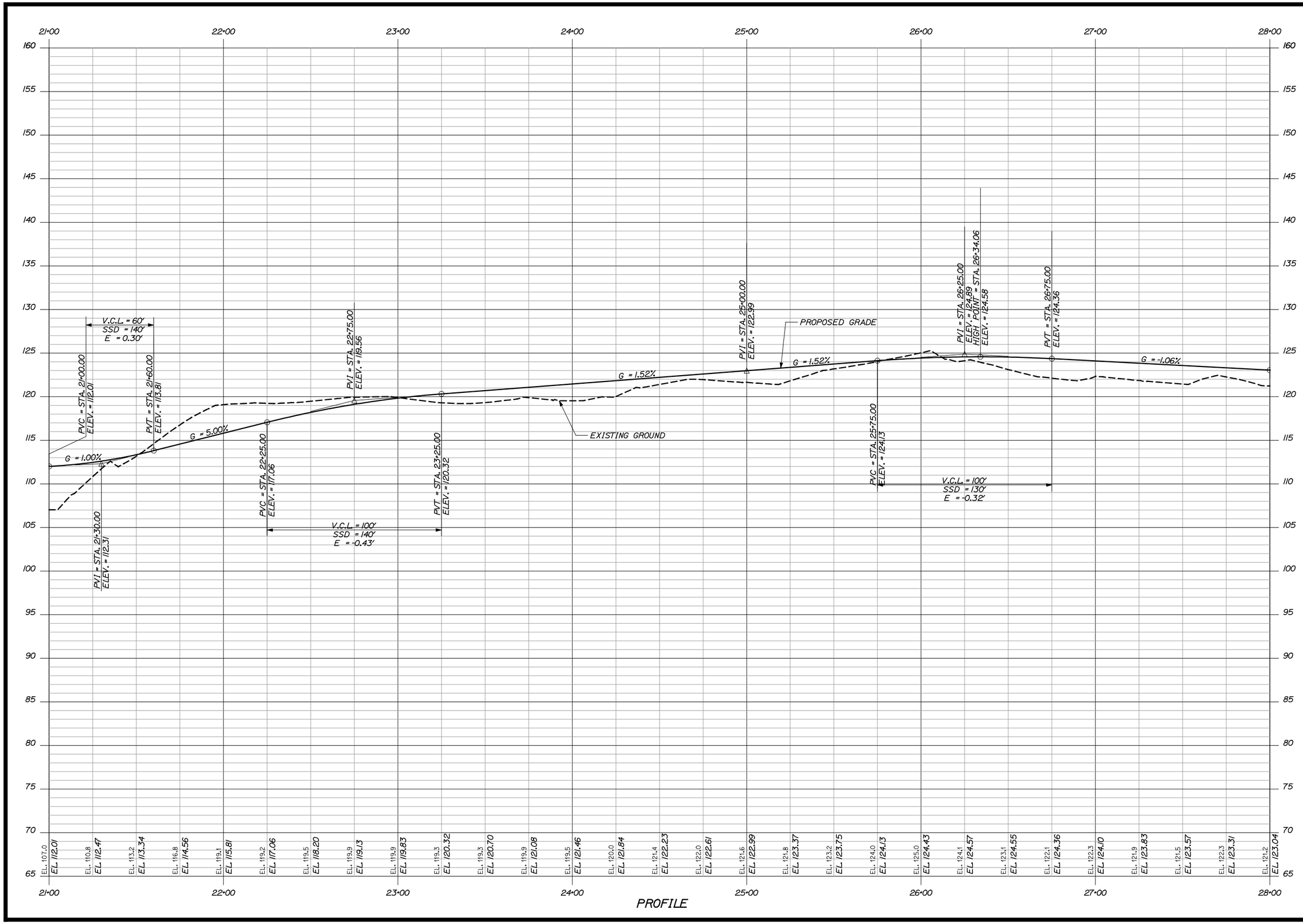

Filename: ...\msta\008_HDProfile04.dgn Division: HIGHWAY Username: dbryant Date:6/28/2016

TOWN OF
TOPSHAM, MAINE

STP-1335(310)X

WIN
13353.10

HIGHWAY PLANS

STATE OF MAINE
JOSEPH R. HOWE
No. 10420
PROFESSIONAL ENGINEER
Licensed

PROJ. MANAGER	DWB		
DESIGN-DETAILED	JRH	JJB	2/16
CHECKED-REVIEWED	JRH	DWB	2/16
DESIGN2-DETAILED2			
DESIGN3-DETAILED3			
REVISIONS 1			
REVISIONS 2			
REVISIONS 3			
REVISIONS 4			
FIELD CHANGES			

SIGNATURE

P.E. NUMBER 10420

6/28/2016
DATE

TOPSHAM
TOPSHAM TRAILS PHASE I - S

PROFILES

SHEET NUMBER
12
OF 45

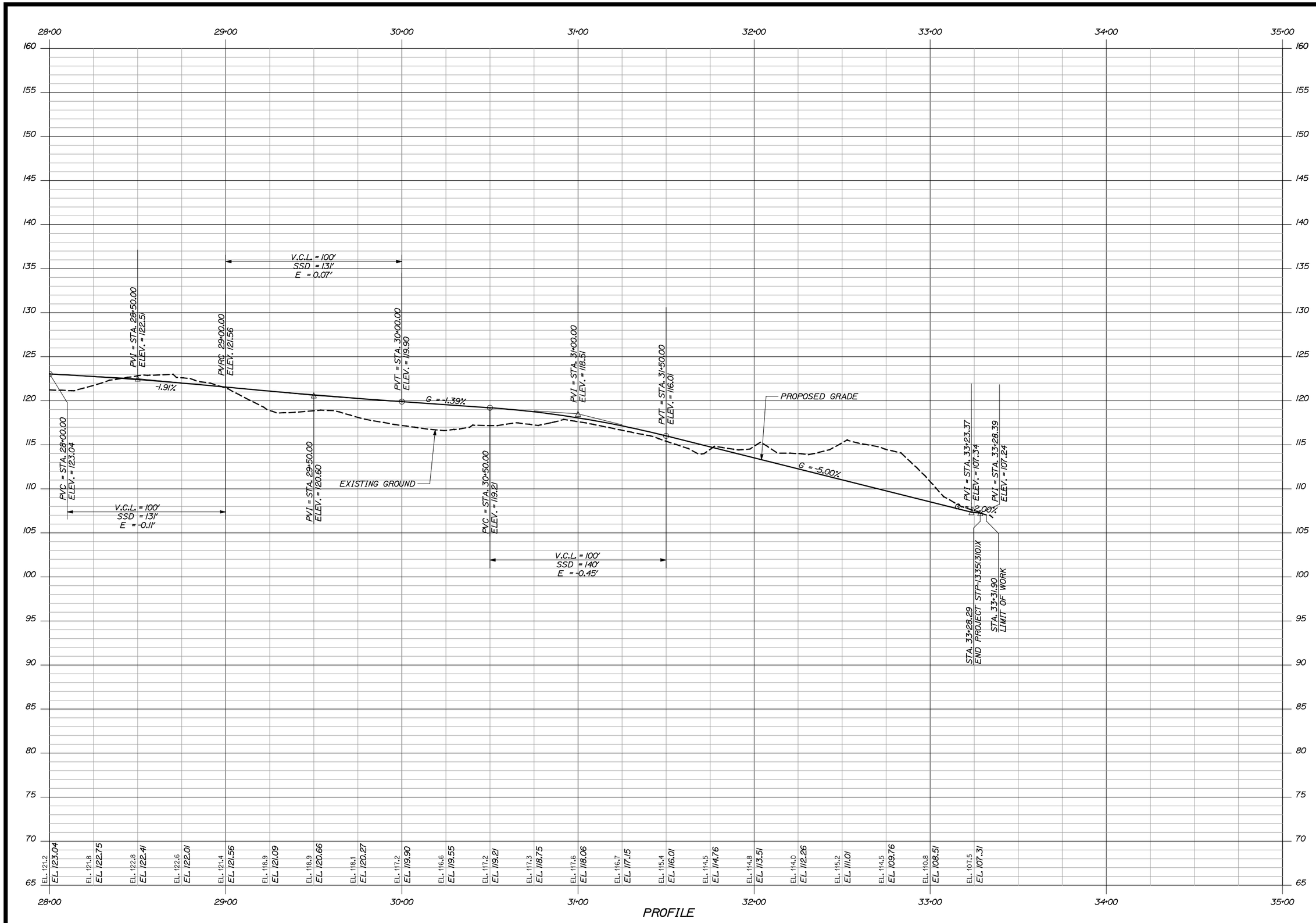

Filename: ...\msta\008_HDProfile05.dgn Division: HIGHWAY Username: dbryant Date:6/28/2016

TOWN OF
TOPSHAM, MAINE

STP-1335(310)X

WIN
13353.10

HIGHWAY PLANS

STATE OF MAINE
JOSEPH R. HOWE
No. 10420
PROFESSIONAL ENGINEER

Joseph R. Howe		
SIGNATURE		
10420		
P.E. NUMBER		
6/28/2016		
DATE		

	BY	DATE
PROJ. MANAGER DWB		
DESIGN-DETAILED JRH	JJB	2/16
CHECKED-REVIEWED JRH	DWB	2/16
DESIGN2-DETAILED2		
DESIGN3-DETAILED3		
REVISIONS 1		
REVISIONS 2		
REVISIONS 3		
REVISIONS 4		
FIELD CHANGES		

TOPSHAM
TOPSHAM TRAILS PHASE I - S

PROFILES

SHEET NUMBER
13
OF 45

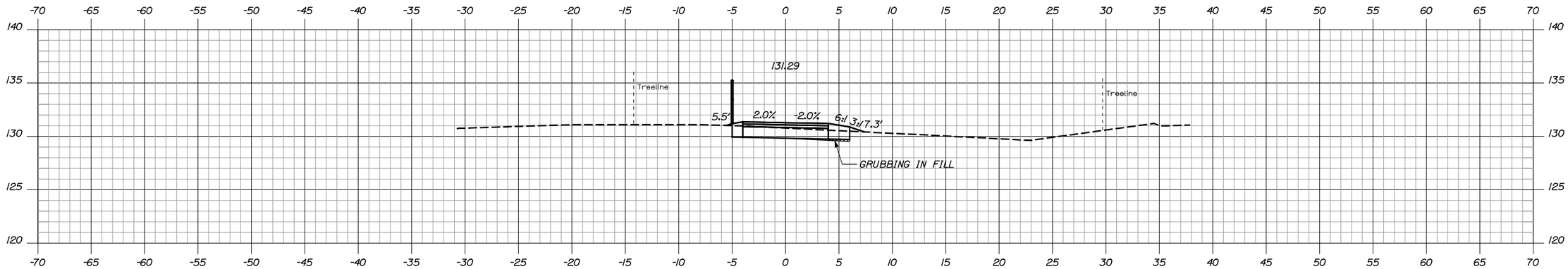

1+50.00

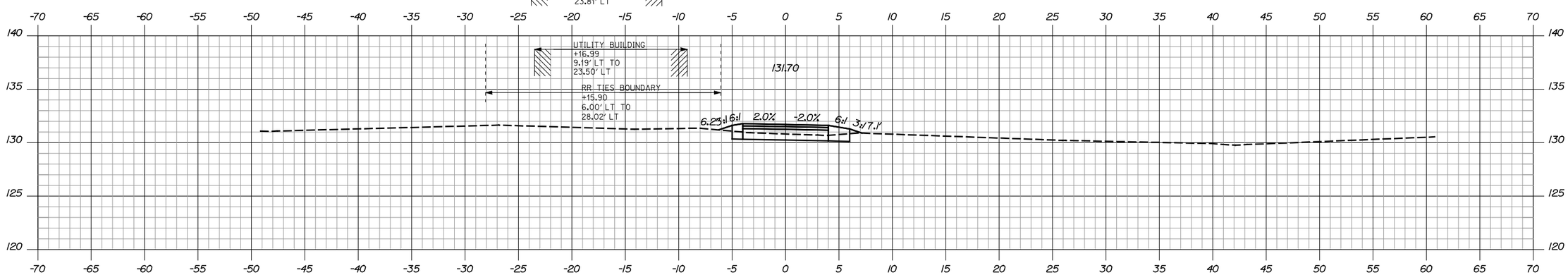

1+00.00

STA. 0+77.11
BEGIN PROJECT STP-1335(310)X

PROJECT MONUMENT 017 H39
+91.40
32.70' RT

5" APPLE
+87.54
30.59' RT

STA. 0+08.84
LIMIT OF WORK

5" DECID.
+80.68
19.38' LT

PREVIOUSLY REMOVED GUY WIRE
+77.59
29.53' RT

UTILITY POLE ?

TOWN OF
TOPSHAM, MAINE

STP-1335(310)X

WIN
13353.10

HIGHWAY PLANS

STATE OF MAINE
JOSEPH R. HOWE
No. 10420
PROFESSIONAL ENGINEER

Joseph R. Howe
SIGNATURE

10420
P.E. NUMBER

6/28/2016
DATE

		BY	DATE
PROJ. MANAGER	DWB		
DESIGN-DETAILED	JRH	JJB	2/16
CHECKED-REVIEWED	JRH	DWB	2/16
DESIGN2-DETAILED2			
DESIGN3-DETAILED3			
REVISIONS 1			
REVISIONS 2			
REVISIONS 3			
REVISIONS 4			
FIELD CHANGES			

TOPSHAM
TOPSHAM TRAILS PHASE I - S

CROSS SECTIONS

SHEET NUMBER
14
OF 45

Sta. 1+00.00 to Sta. 1+50.00

Date:6/28/2016
Username: dbryant
Division: HIGHWAY
Filename: ...\msta\XS_South_Final.dgn

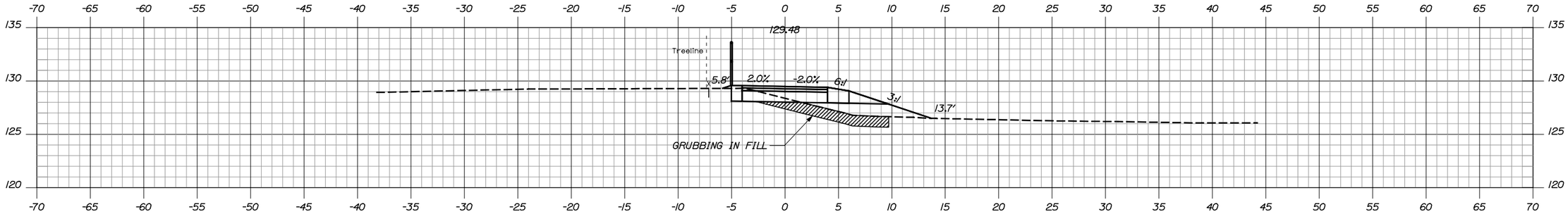

3+00.00

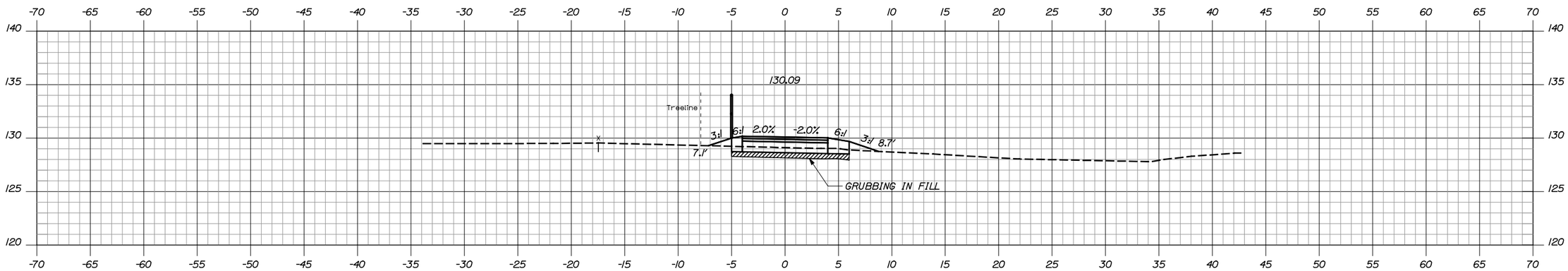

2+50.00

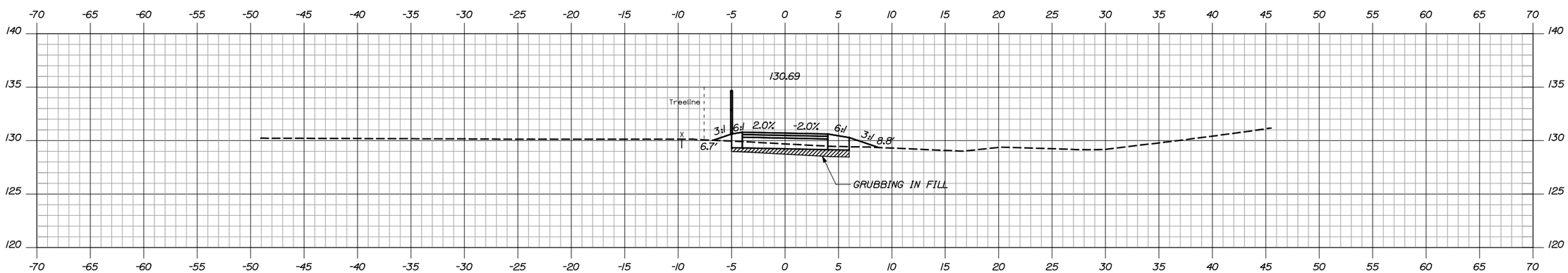

2+00.00

TOWN OF
TOPSHAM, MAINE

STP-1335(310)X

WIN
13353.10

HIGHWAY PLANS

STATE OF MAINE
JOSEPH R. HOWE
No. 10420
PROFESSIONAL ENGINEER

Joseph R. Howe

SIGNATURE

10420

P.E. NUMBER

6/28/2016

DATE

		BY	DATE
PROJ. MANAGER	DWB		
DESIGN-DETAILED	JRH	JJB	2/16
CHECKED-REVIEWED	JRH	DWB	2/16
DESIGN2-DETAILED2			
DESIGN3-DETAILED3			
REVISIONS 1			
REVISIONS 2			
REVISIONS 3			
REVISIONS 4			
FIELD CHANGES			

TOPSHAM
TOPSHAM TRAILS PHASE I - S

CROSS SECTIONS

SHEET NUMBER

15

OF 45

Sta. 2+00.00 to Sta. 3+00.00

Filename: ...\msta\XS_South_Final.dgn Division: HIGHWAY Username: dbryant Date:6/28/2016

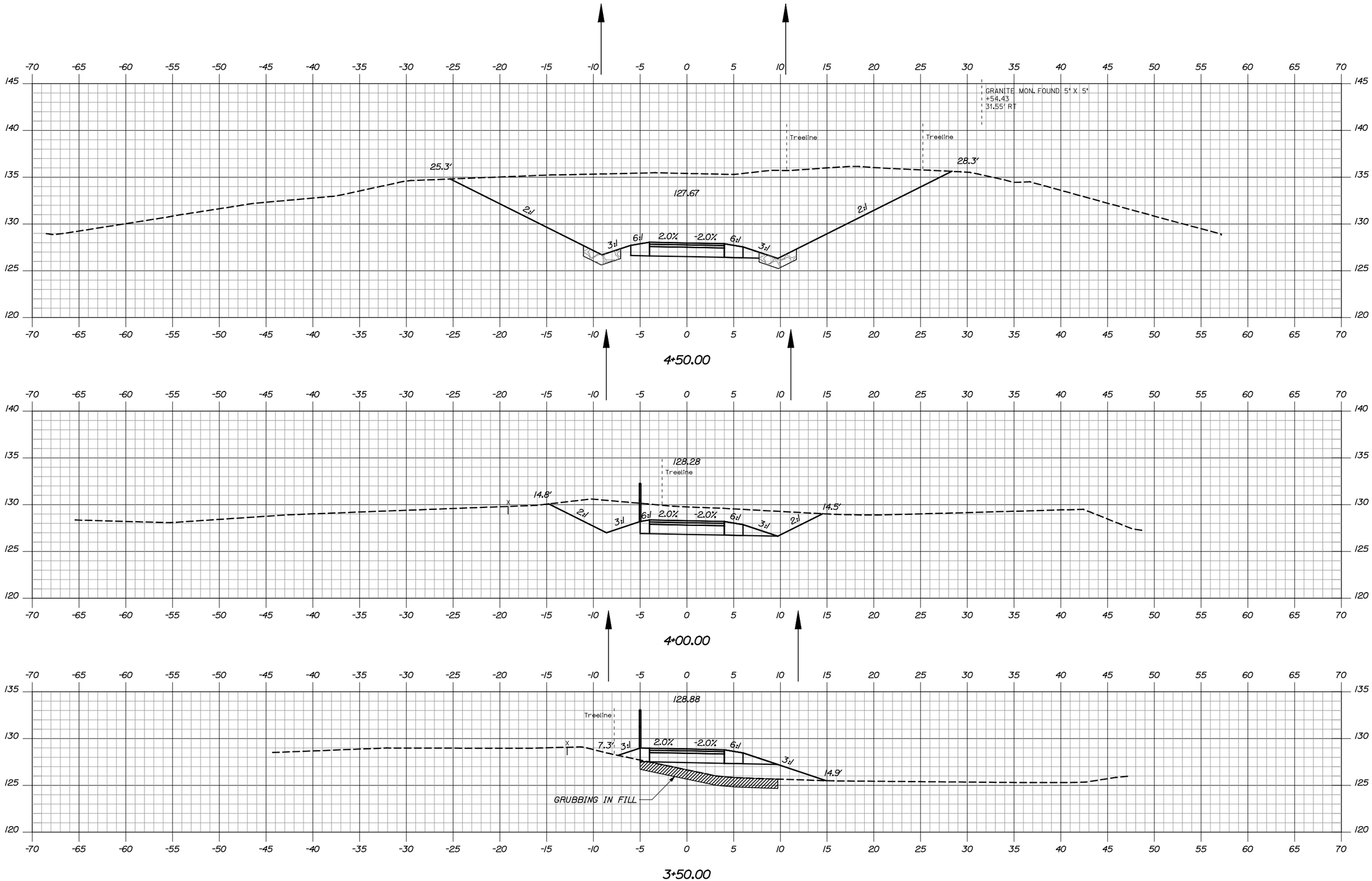

TOWN OF
TOPSHAM, MAINE

STP-1335(310)X

WIN
13353.10

HIGHWAY PLANS

STATE OF MAINE
JOSEPH R. HOWE
No. 10420
PROFESSIONAL ENGINEER

Joseph R. Howe
SIGNATURE

10420
P.E. NUMBER

6/28/2016
DATE

		BY	DATE
PROJ. MANAGER	DWB		
DESIGN-DETAILED	JRH	JJB	2/16
CHECKED-REVIEWED	JRH	DWB	2/16
DESIGN2-DETAILED2			
DESIGN3-DETAILED3			
REVISIONS 1			
REVISIONS 2			
REVISIONS 3			
REVISIONS 4			
FIELD CHANGES			

TOPSHAM
TOPSHAM TRAILS PHASE I - S

CROSS SECTIONS

SHEET NUMBER
16
OF 45

Sta. 3+50.00 to Sta. 4+50.00

Filename: ...\msta\XS_South_Final.dgn Division: HIGHWAY Username: dbryant Date:6/28/2016

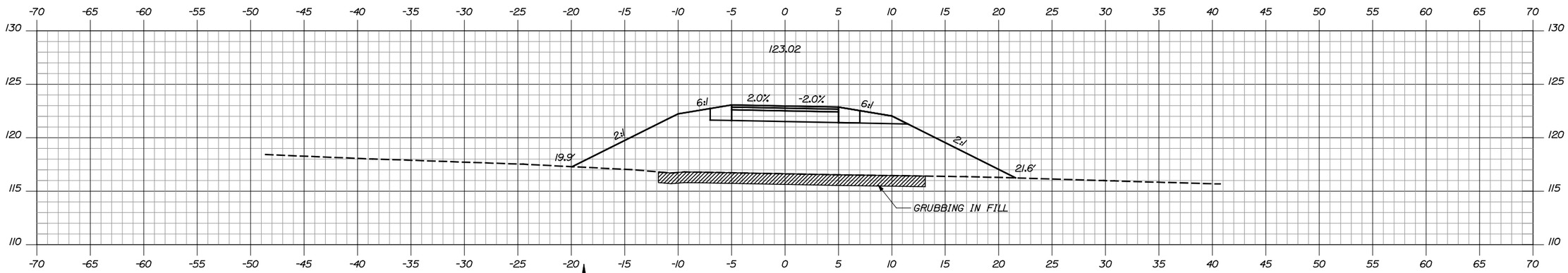

6+00.00

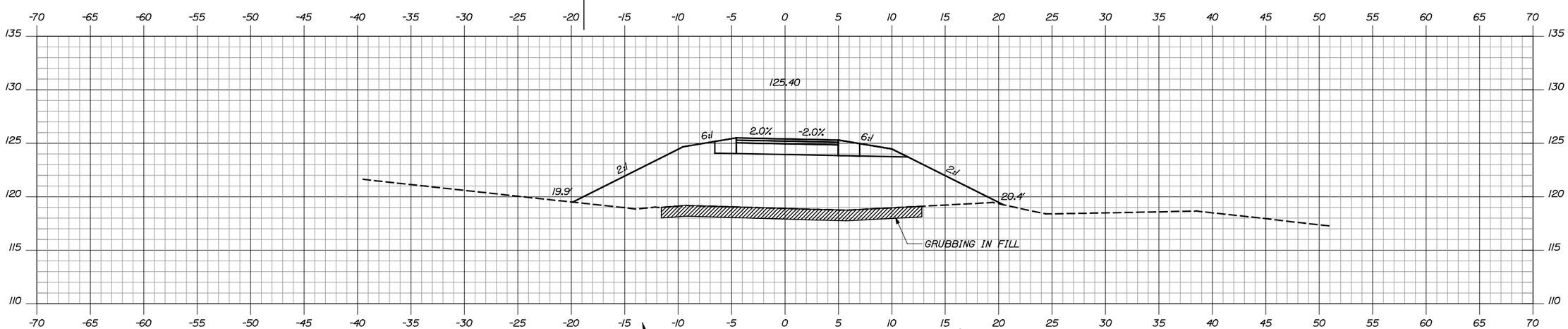

5+50.00

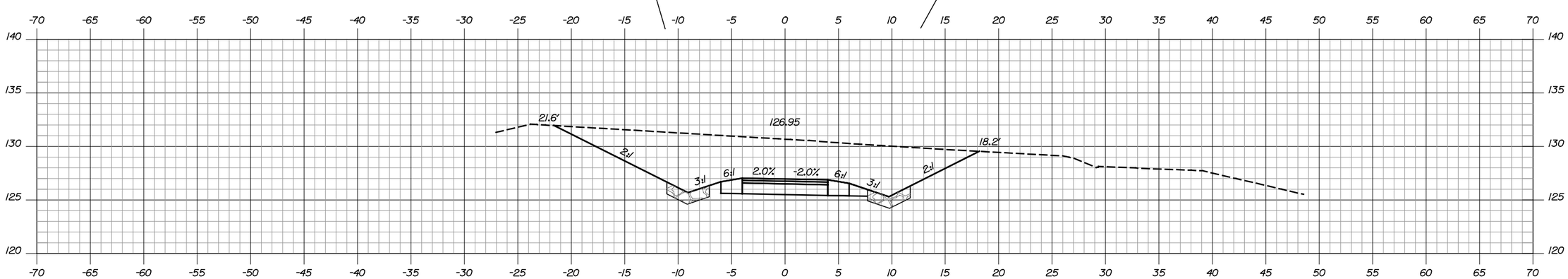

5+00.00

TOWN OF
TOPSHAM, MAINE

STP-1335(310)X

WIN
13353.10

HIGHWAY PLANS

STATE OF MAINE
JOSEPH R. HOWE
No. 10420
PROFESSIONAL ENGINEER

SIGNATURE	
P.E. NUMBER	10420
DATE	6/28/2016

PROJ. MANAGER	DWB
DESIGN-DETAILED	JRH
CHECKED-REVIEWED	JRH
DESIGN2-DETAILED2	
DESIGN3-DETAILED3	
REVISIONS 1	
REVISIONS 2	
REVISIONS 3	
REVISIONS 4	
FIELD CHANGES	

BY	DATE
JJB	2/16
DWB	2/16

TOPSHAM
TOPSHAM TRAILS PHASE I - S

CROSS SECTIONS

SHEET NUMBER
17
OF 45

Sta. 5+00.00 to Sta. 6+00.00

Filename: ...\msta\XS_South_Final.dgn Division: HIGHWAY Username: dbryant Date:6/28/2016

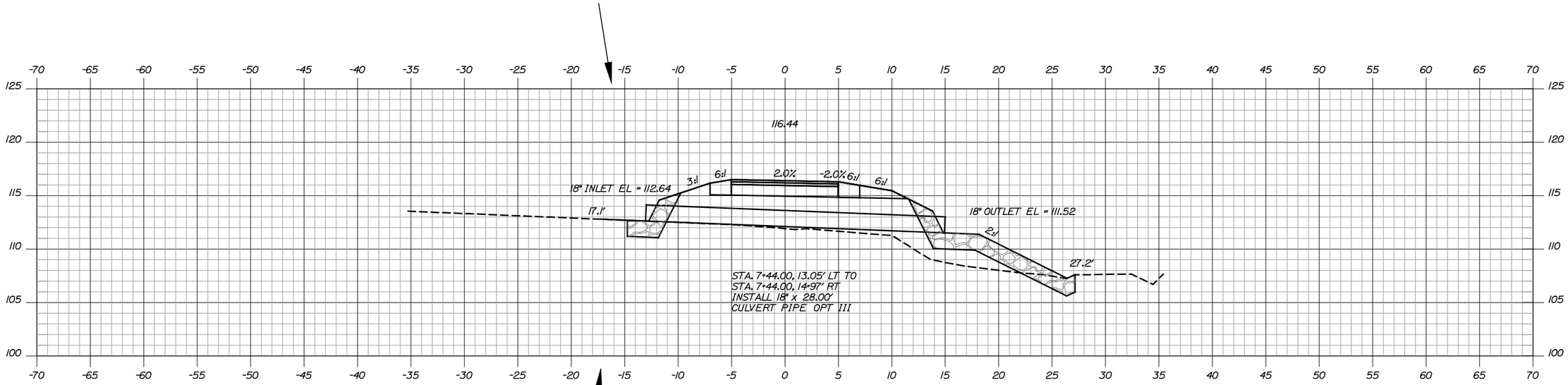

7+44.00

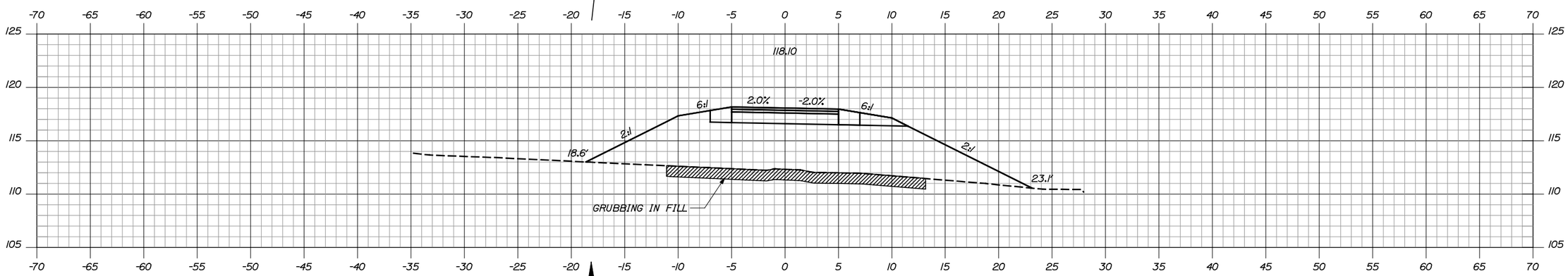

7+00.00

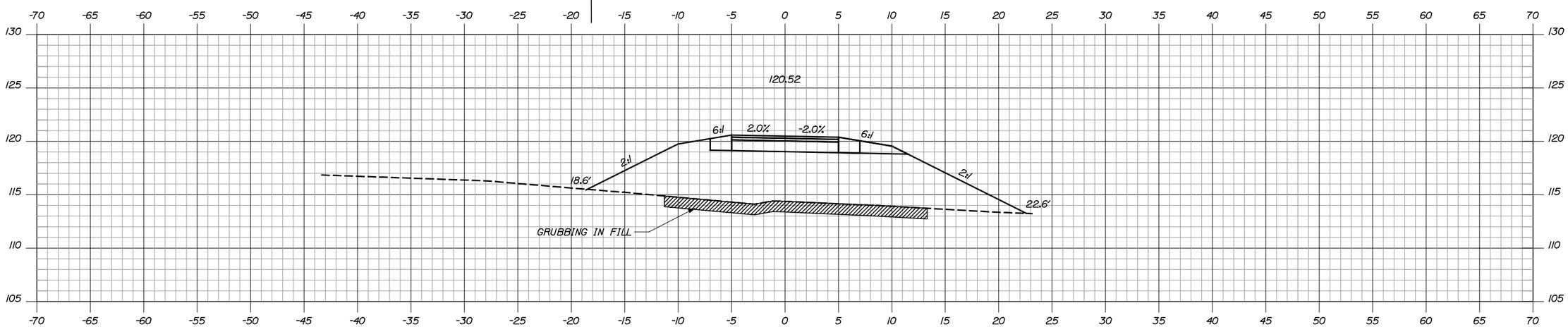

6+50.00

Sta. 6+50.00 to Sta. 7+44.00

TOWN OF
TOPSHAM, MAINE

STP-1335(310)X

WIN
13353.10

HIGHWAY PLANS

STATE OF MAINE
JOSEPH R. HOWE
No. 10420
PROFESSIONAL ENGINEER

Joseph R. Howe		
SIGNATURE		
10420		
P.E. NUMBER		
6/28/2016		
DATE		

PROJ. MANAGER	DWB		
		BY	DATE
DESIGN-DETAILED	JRH	JJB	2/16
CHECKED-REVIEWED	JRH	DWB	2/16
DESIGN2-DETAILED2			
DESIGN3-DETAILED3			
REVISIONS 1			
REVISIONS 2			
REVISIONS 3			
REVISIONS 4			
FIELD CHANGES			

TOPSHAM
TOPSHAM TRAILS PHASE I - S

CROSS SECTIONS

SHEET NUMBER
18
OF 45

Filename: ...\msta\XS_South_Final.dgn Division: HIGHWAY Username: dbryant Date:6/28/2016

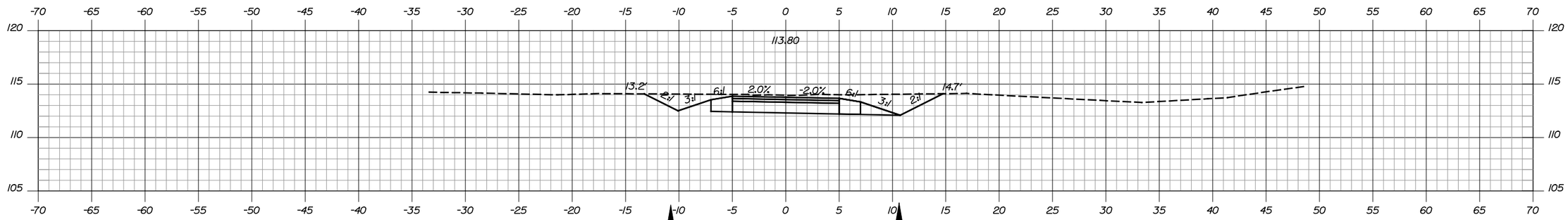

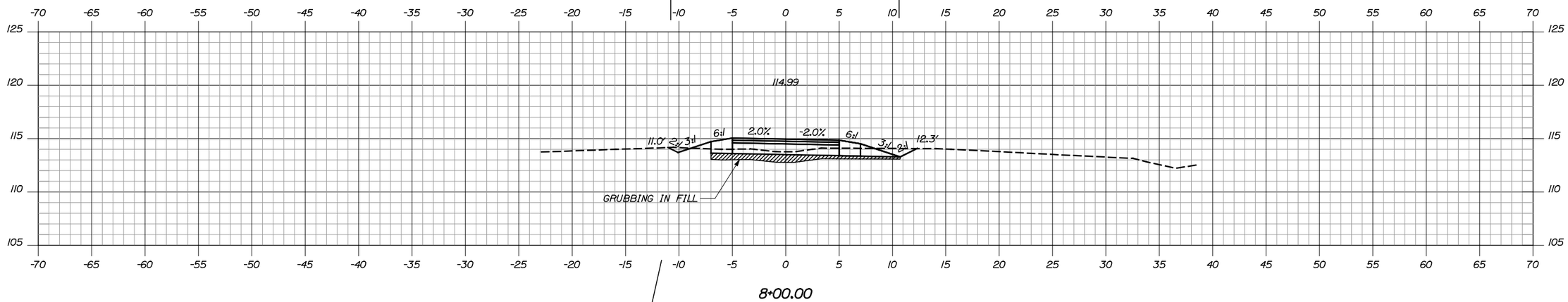

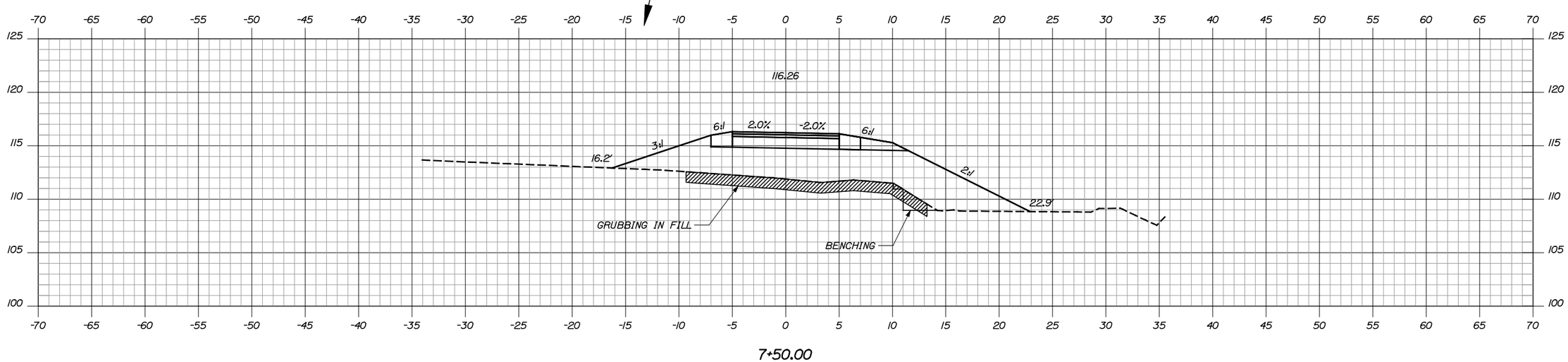

TOWN OF
TOPSHAM, MAINE

STP-1335(310)X

WIN
13353.10

HIGHWAY PLANS

STATE OF MAINE
JOSEPH R. HOWE
No. 10420
PROFESSIONAL ENGINEER

Joseph R. Howe

SIGNATURE	
10420	
P.E. NUMBER	
6/28/2016	
DATE	

	BY	DATE
PROJ. MANAGER	DWB	
DESIGN-DETAILED	JRH	2/16
CHECKED-REVIEWED	JRH	2/16
DESIGN2-DETAILED2		
DESIGN3-DETAILED3		
REVISIONS 1		
REVISIONS 2		
REVISIONS 3		
REVISIONS 4		
FIELD CHANGES		

TOPSHAM
TOPSHAM TRAILS PHASE I - S

CROSS SECTIONS

SHEET NUMBER
19
OF 45

Sta. 7+50.00 to Sta. 8+50.00

Filename: ...\msta\XS_South_Final.dgn Division: HIGHWAY Username: dbryant Date:6/28/2016

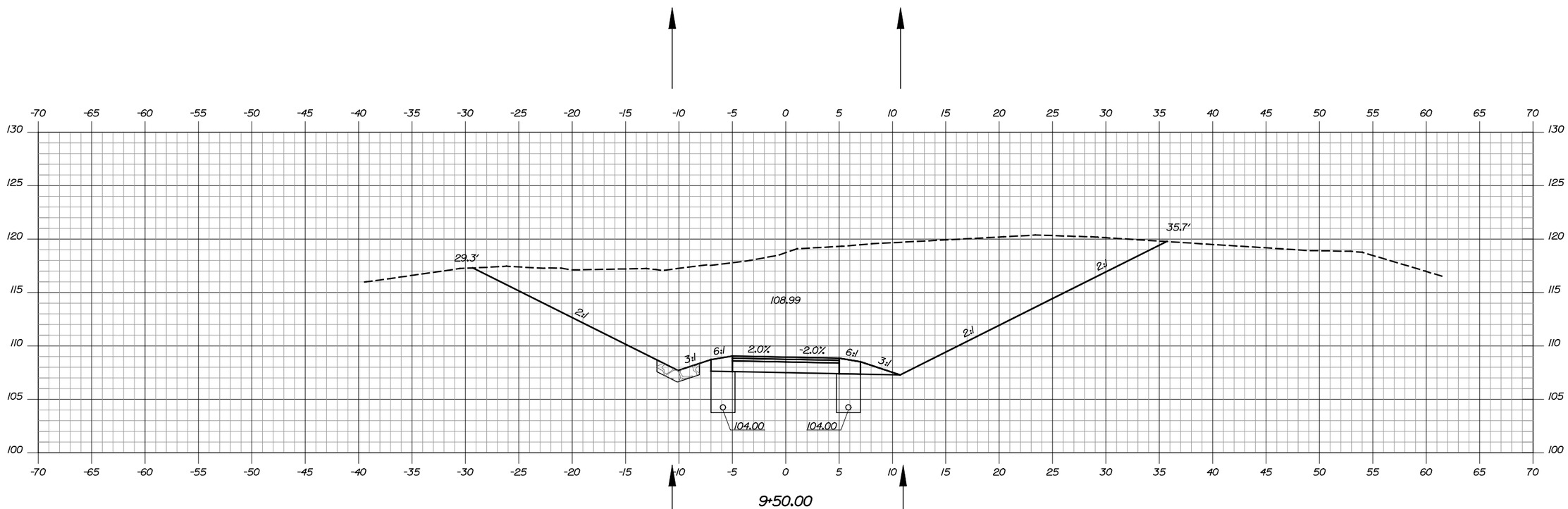

9+50.00

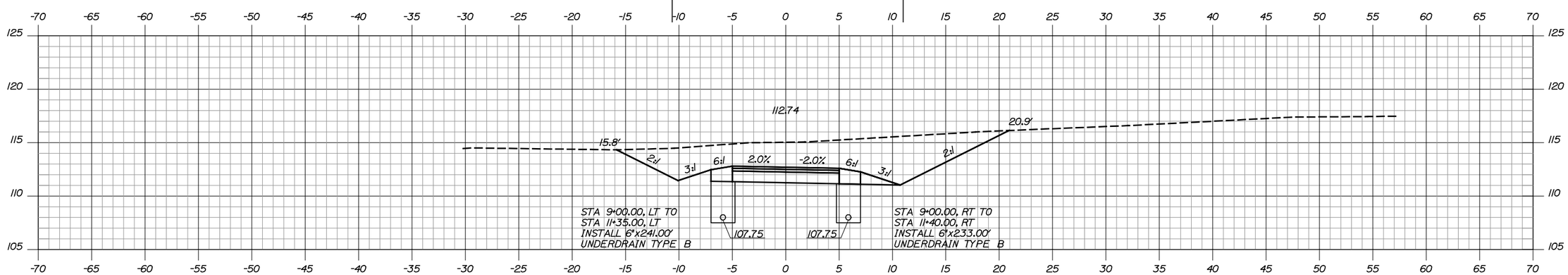

9+00.00

TOWN OF
TOPSHAM, MAINE

STP-1335(310)X

WIN
13353.10

HIGHWAY PLANS

STATE OF MAINE
JOSEPH R. HOWE
No. 10420
PROFESSIONAL ENGINEER

Joseph R. Howe

SIGNATURE

10420

P.E. NUMBER

6/28/2016

DATE

		BY	DATE
PROJ. MANAGER	DWB		
DESIGN-DETAILED	JRH	JJB	2/16
CHECKED-REVIEWED	JRH	DWB	2/16
DESIGN2-DETAILED2			
DESIGN3-DETAILED3			
REVISIONS 1			
REVISIONS 2			
REVISIONS 3			
REVISIONS 4			
FIELD CHANGES			

TOPSHAM
TOPSHAM TRAILS PHASE I - S

CROSS SECTIONS

SHEET NUMBER

20

OF 45

Sta. 9+00.00 to Sta. 9+50.00

Filename: ...\msta\XS_South_Final.dgn Division: HIGHWAY Username: dbryant Date:6/28/2016

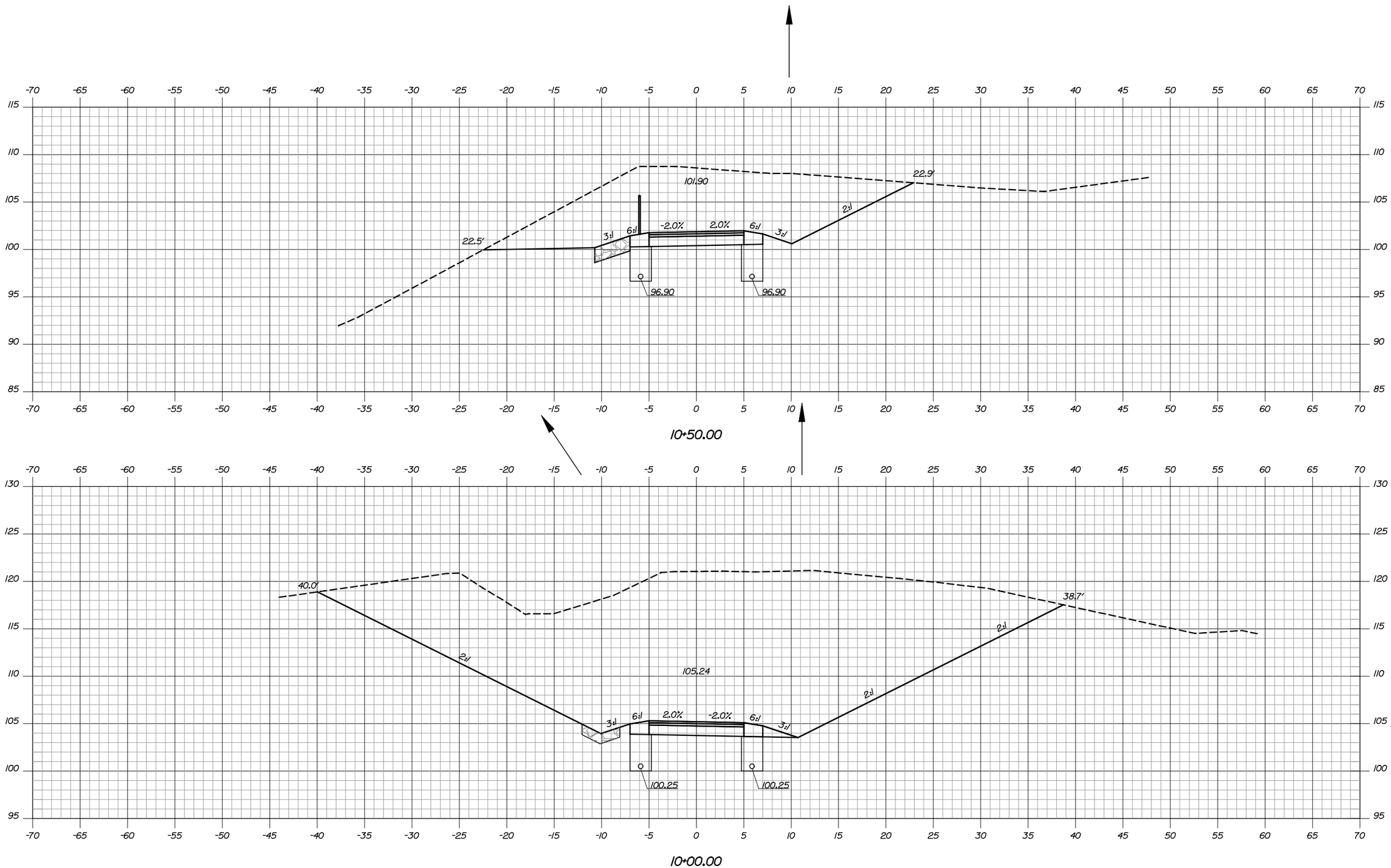

Sta. 10+00.00 to Sta. 10+50.00

TOWN OF
TOPSHAM, MAINE

STP-1335(310)X

WIN
13353.10

HIGHWAY PLANS

STATE OF MAINE
JOSEPH R. HOWE
No. 10420
PROFESSIONAL ENGINEER

Joseph R. Howe

SIGNATURE	
10420	P.E. NUMBER
6/28/2016	DATE

		BY	DATE
PROJ. MANAGER	DWB		
DESIGN-DETAILED	JRH	JJB	2/16
CHECKED-REVIEWED	JRH	DWB	2/16
DESIGN2-DETAILED2			
DESIGN3-DETAILED3			
REVISIONS 1			
REVISIONS 2			
REVISIONS 3			
REVISIONS 4			
FIELD CHANGES			

TOPSHAM
TOPSHAM TRAILS PHASE I - S

CROSS SECTIONS

SHEET NUMBER
21
OF 45

Filename: ...\msta\XS_South_Final.dgn Division: HIGHWAY Username: dbryant Date:6/28/2016

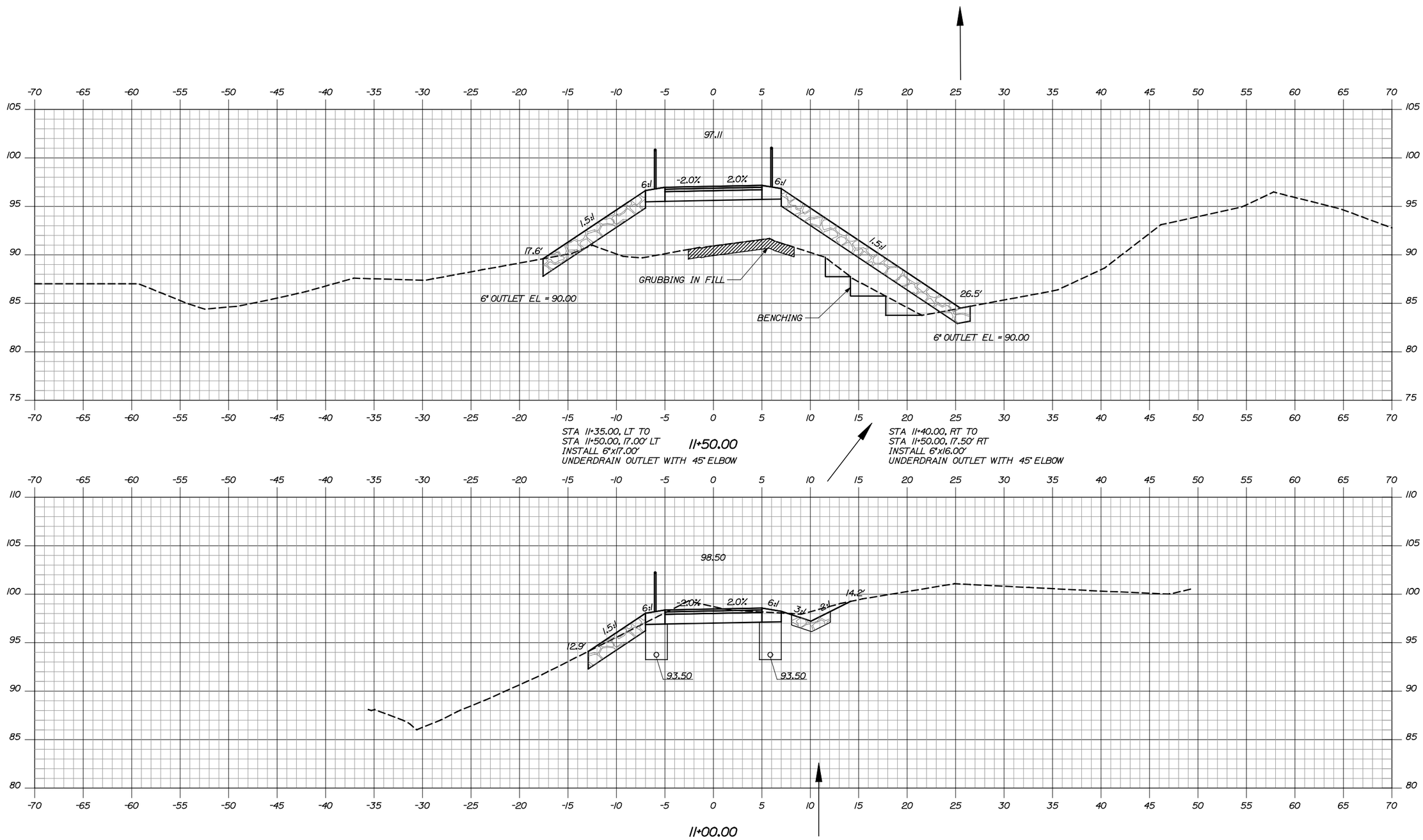

Sta. 11+00.00 to Sta. 11+50.00

TOWN OF
TOPSHAM, MAINE

STP-1335(310)X

WIN
13353.10

HIGHWAY PLANS

STATE OF MAINE
JOSEPH R. HOWE
No. 10420
PROFESSIONAL ENGINEER

Joseph R. Howe

SIGNATURE	
10420	
P.E. NUMBER	
6/28/2016	
DATE	

		BY	DATE
PROJ. MANAGER	DWB		
DESIGN-DETAILED	JRH	JJB	2/16
CHECKED-REVIEWED	JRH	DWB	2/16
DESIGN2-DETAILED2			
DESIGN3-DETAILED3			
REVISIONS 1			
REVISIONS 2			
REVISIONS 3			
REVISIONS 4			
FIELD CHANGES			

TOPSHAM
TOPSHAM TRAILS PHASE I - S

CROSS SECTIONS

SHEET NUMBER
22
OF 45

Filename: ...\mste\XS_South_Final.dgn Division: HIGHWAY Username: dbryant Date:6/28/2016

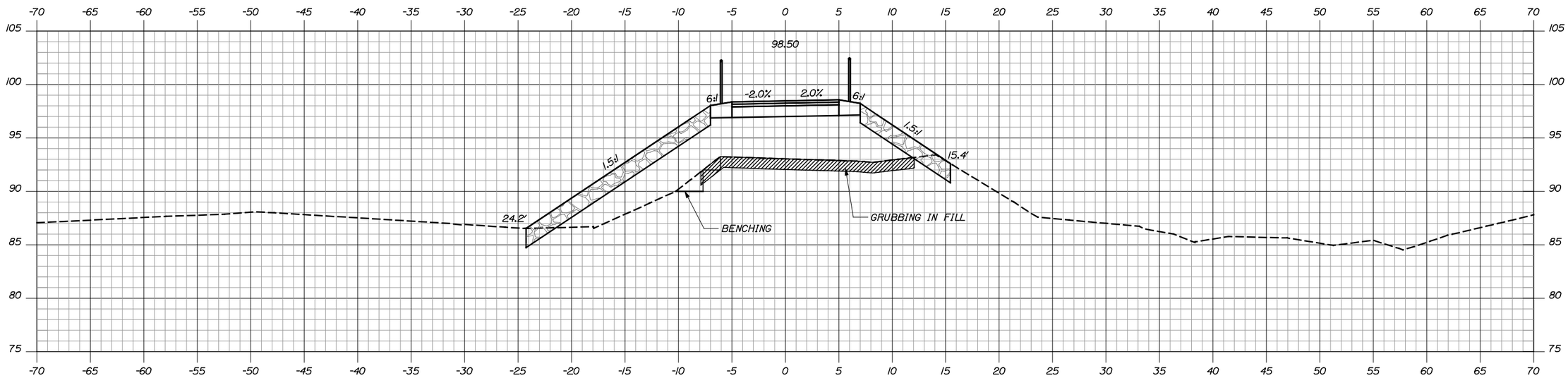

12+00.00

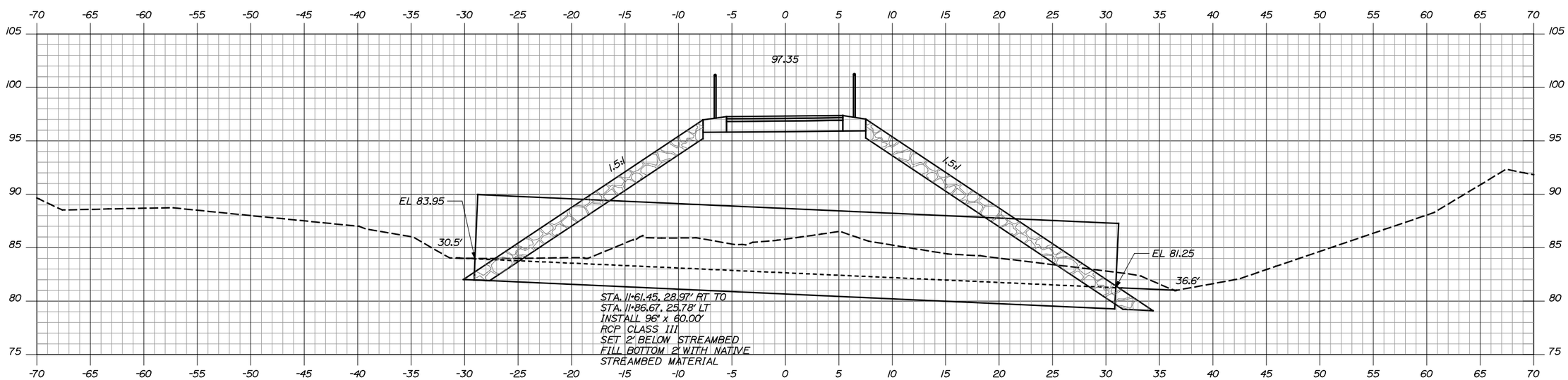

11+70.60
SKEWED PIPE

Sta. 11+70.60 to Sta. 12+00.00

TOWN OF
TOPSHAM, MAINE

STP-1335(310)X

WIN
13353.10

HIGHWAY PLANS

STATE OF MAINE
JOSEPH R. HOWE
No. 10420
PROFESSIONAL ENGINEER

Joseph R. Howe

SIGNATURE

10420
P.E. NUMBER

6/28/2016
DATE

		BY	DATE
PROJ. MANAGER	DWB		
DESIGN-DETAILED	JRH	JJB	2/16
CHECKED-REVIEWED	JRH	DWB	2/16
DESIGN2-DETAILED2			
DESIGN3-DETAILED3			
REVISIONS 1			
REVISIONS 2			
REVISIONS 3			
REVISIONS 4			
FIELD CHANGES			

TOPSHAM
TOPSHAM TRAILS PHASE I - S

CROSS SECTIONS

SHEET NUMBER
23
OF 45

Filename: ...\mste\XS_South_Final.dgn Division: HIGHWAY Username: dbryant Date:6/28/2016

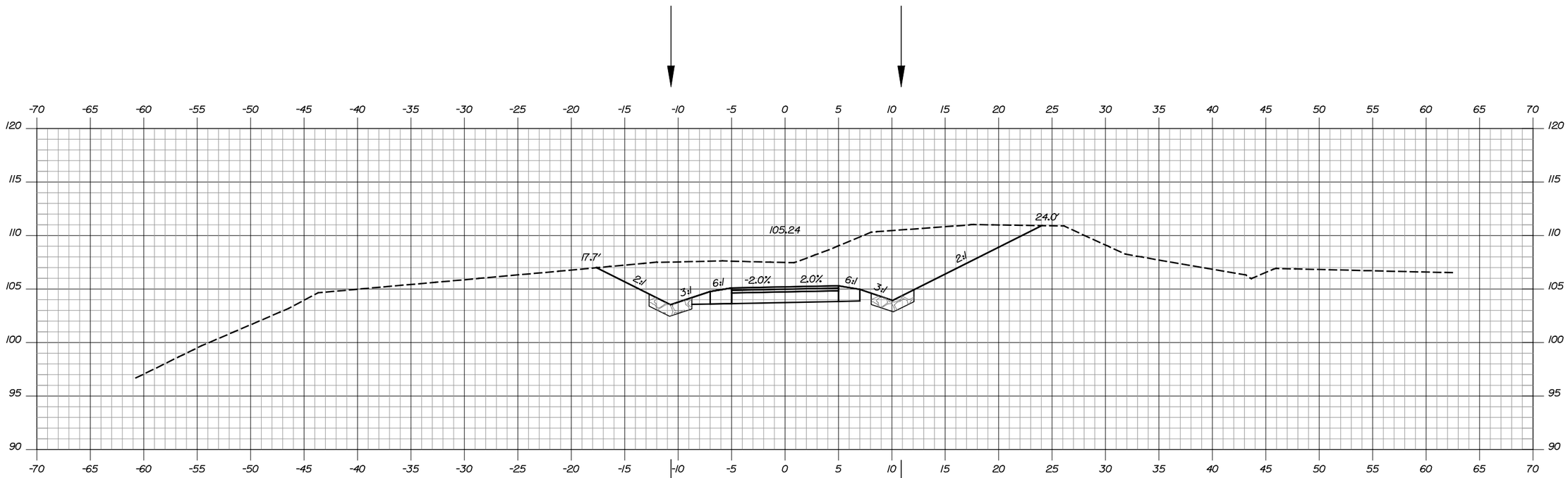

13+00.00

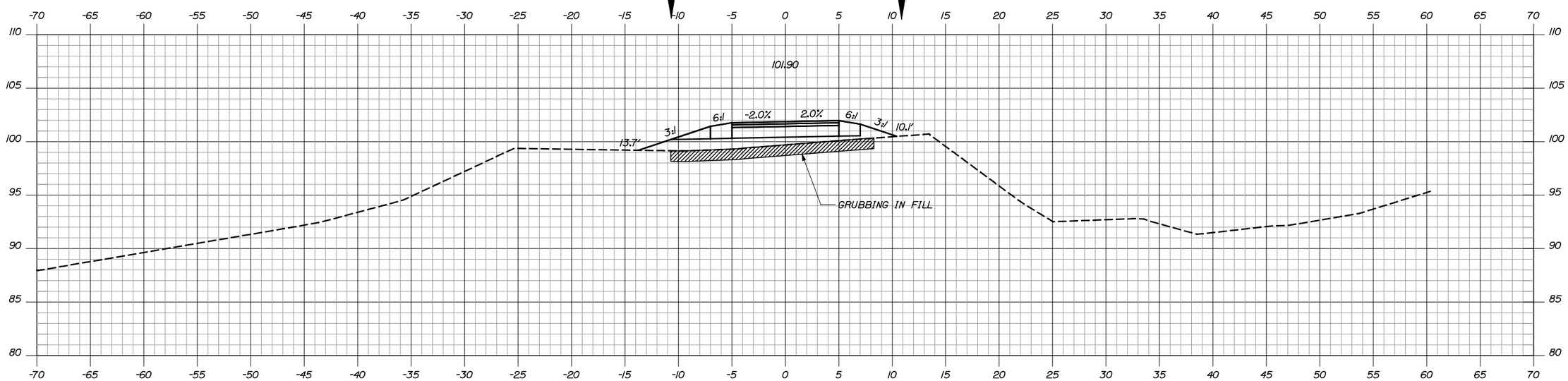

12+50.00

Sta. 12+50.00 to Sta. 13+00.00

TOWN OF
TOPSHAM, MAINE

STP-1335(310)X

WIN
13353.10

HIGHWAY PLANS

STATE OF MAINE
JOSEPH R. HOWE
No. 10420
PROFESSIONAL ENGINEER

Joseph R. Howe

SIGNATURE

10420

P.E. NUMBER

6/28/2016

DATE

		BY	DATE
PROJ. MANAGER	DWB		
DESIGN-DETAILED	JRH	JJB	2/16
CHECKED-REVIEWED	JRH	DWB	2/16
DESIGN2-DETAILED2			
DESIGN3-DETAILED3			
REVISIONS 1			
REVISIONS 2			
REVISIONS 3			
REVISIONS 4			
FIELD CHANGES			

TOPSHAM
TOPSHAM TRAILS PHASE I - S

CROSS SECTIONS

SHEET NUMBER

24

OF 45

Filename: ...\mste\XS_South_Final.dgn Division: HIGHWAY Username: dbryant Date:6/28/2016

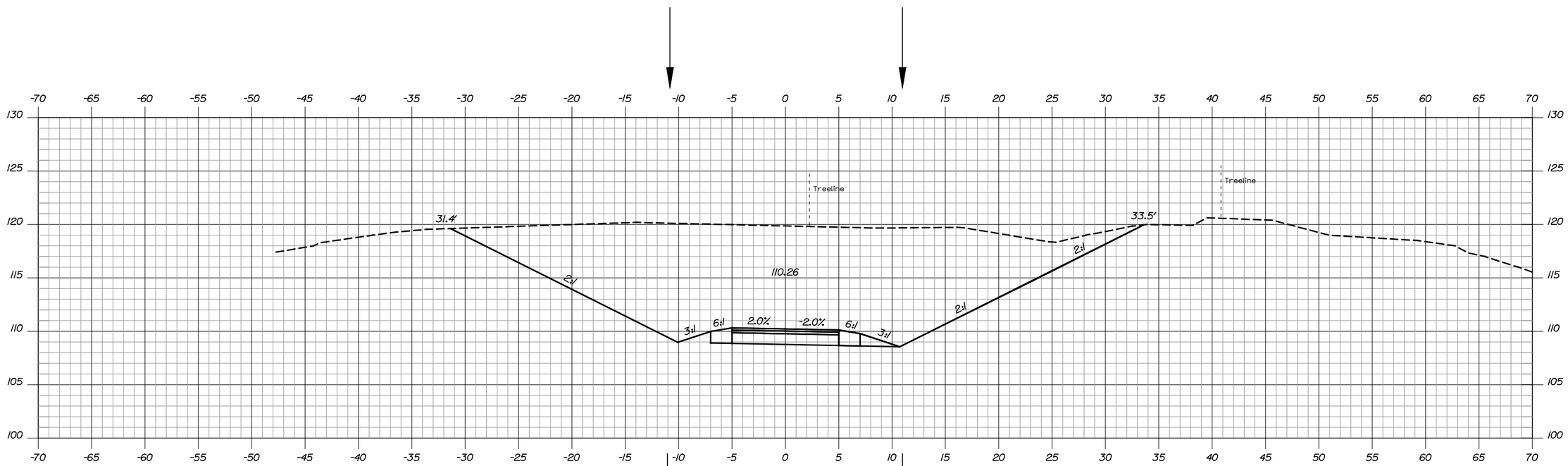

14+00.00

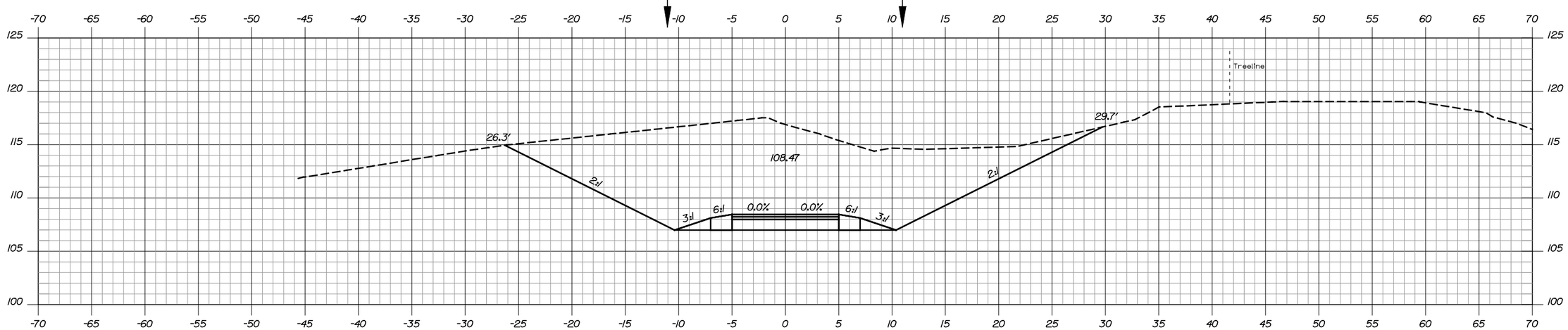

13+50.00

Sta. 13+50.00 to Sta. 14+00.00

TOWN OF
TOPSHAM, MAINE

STP-1335(310)X

WIN
13353.10

HIGHWAY PLANS

STATE OF MAINE
JOSEPH R. HOWE
No. 10420
PROFESSIONAL ENGINEER

PROJ. MANAGER	DWB		
DESIGN-DETAILED	JRH	JJB	2/16
CHECKED-REVIEWED	JRH	DWB	2/16
DESIGN2-DETAILED2			
DESIGN3-DETAILED3			
REVISIONS 1			
REVISIONS 2			
REVISIONS 3			
REVISIONS 4			
FIELD CHANGES			

SIGNATURE
10420
P.E. NUMBER
6/28/2016
DATE

TOPSHAM
TOPSHAM TRAILS PHASE I - S

CROSS SECTIONS

SHEET NUMBER
25
OF 45

Filename: ...\mstar\XS_South_Final.dgn
Division: HIGHWAY
Username: dbryant
Date:6/28/2016

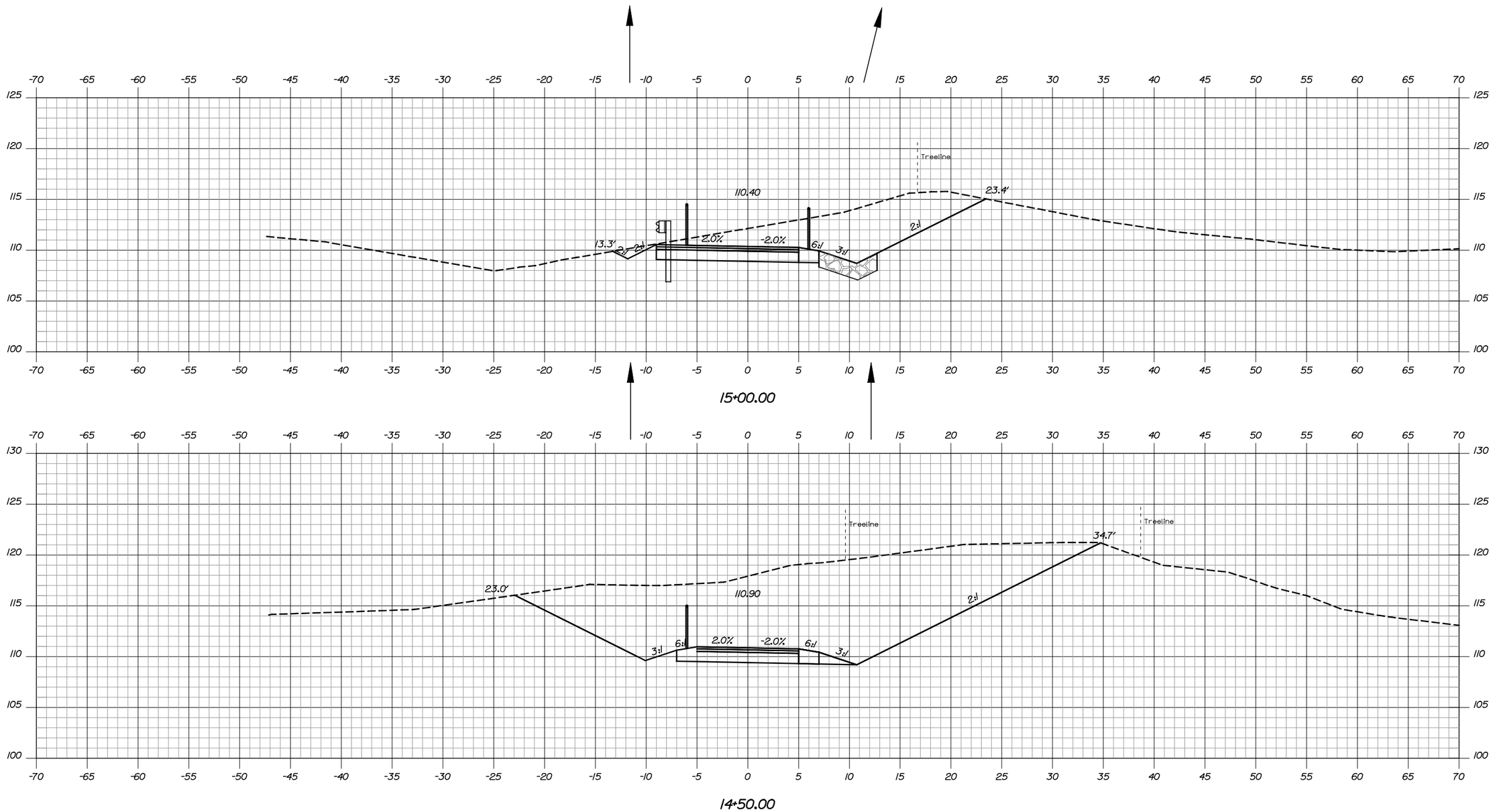

Filename: ...\msta\XS_South_Final.dgn Division: HIGHWAY Username: dbryant Date:6/28/2016

TOWN OF
TOPSHAM, MAINE

STP-1335(310)X

WIN
13353.10

HIGHWAY PLANS

STATE OF MAINE
JOSEPH R. HOWE
No. 10420
LICENSED
PROFESSIONAL ENGINEER

Joseph R. Howe

SIGNATURE
10420
P.E. NUMBER
6/28/2016
DATE

		BY	DATE
PROJ. MANAGER	DWB		
DESIGN-DETAILED	JRH	JJB	2/16
CHECKED-REVIEWED	JRH	DWB	2/16
DESIGN2-DETAILED2			
DESIGN3-DETAILED3			
REVISIONS 1			
REVISIONS 2			
REVISIONS 3			
REVISIONS 4			
FIELD CHANGES			

TOPSHAM
TOPSHAM TRAILS PHASE I - S

CROSS SECTIONS

SHEET NUMBER
26
OF 45

Sta. 14+50.00 to Sta. 15+00.00

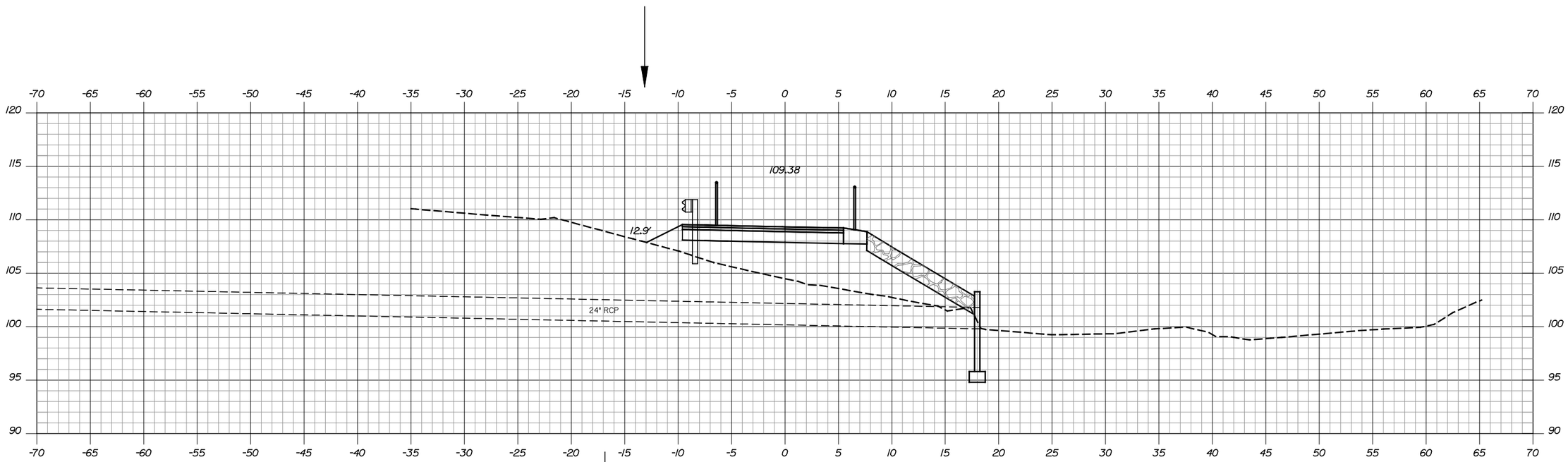

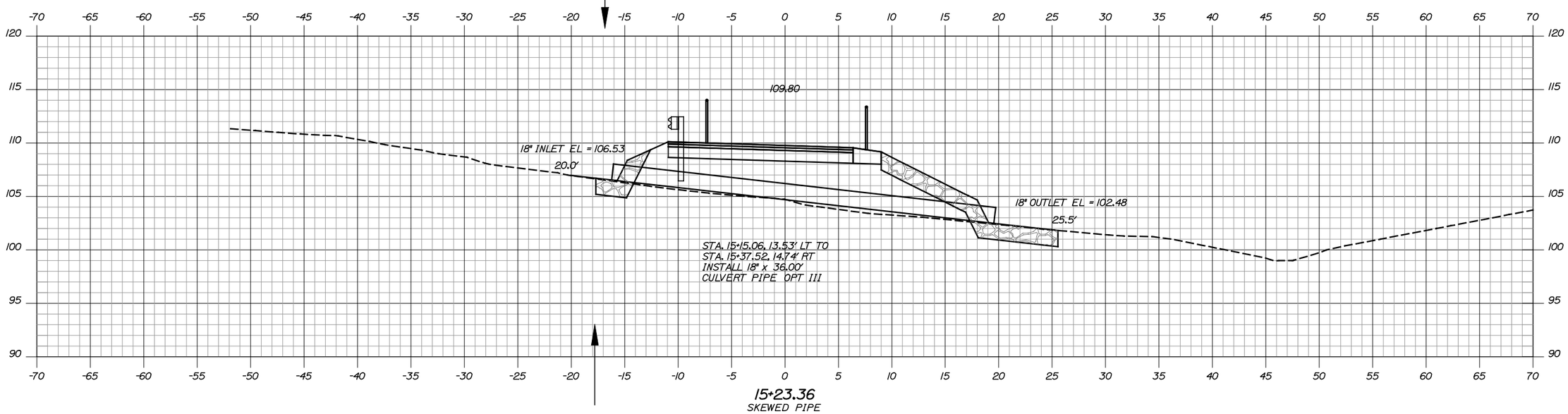

TOWN OF
TOPSHAM, MAINE

STP-1335(310)X

WIN
13353.10

HIGHWAY PLANS

STATE OF MAINE
JOSEPH R. HOWE
No. 10420
PROFESSIONAL ENGINEER

Joseph R. Howe

SIGNATURE

10420

P.E. NUMBER

6/28/2016

DATE

		BY	DATE
PROJ. MANAGER	DWB		
DESIGN-DETAILED	JRH	JJB	2/16
CHECKED-REVIEWED	JRH	DWB	2/16
DESIGN2-DETAILED2			
DESIGN3-DETAILED3			
REVISIONS 1			
REVISIONS 2			
REVISIONS 3			
REVISIONS 4			
FIELD CHANGES			

TOPSHAM
TOPSHAM TRAILS PHASE I - S

CROSS SECTIONS

SHEET NUMBER

27

OF 45

Sta. 15+23.36 to Sta. 15+45.34

Filename: ...\mste\XS_South_Final.dgn Division: HIGHWAY Username: dbryant Date:6/28/2016

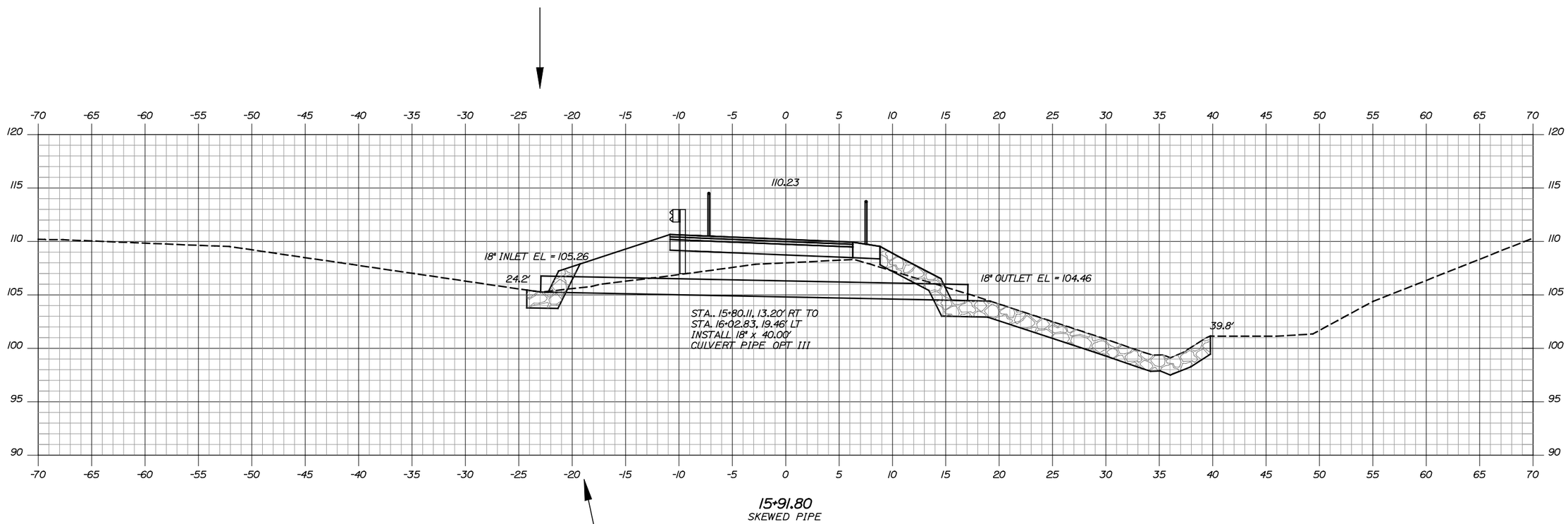

15+91.80
SKEWED PIPE

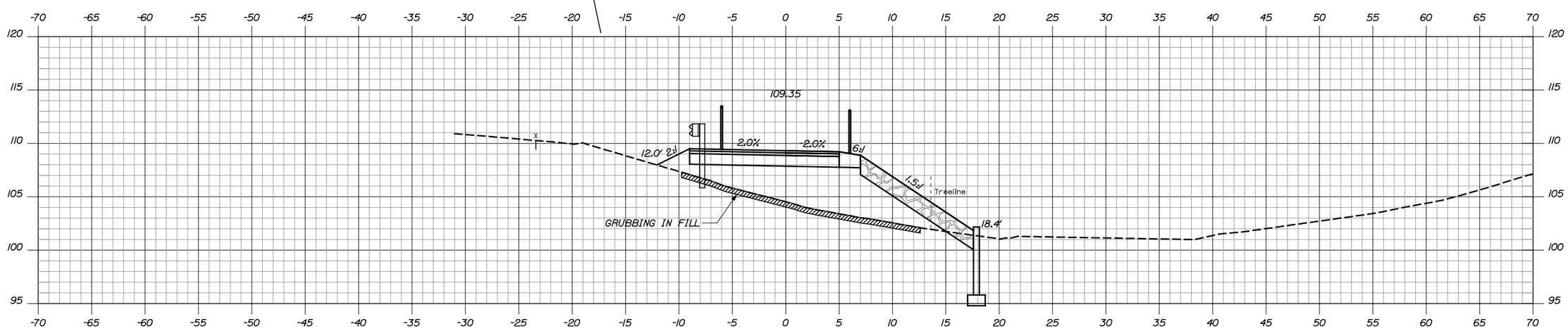

15+50.00

Sta. 15+50.00 to Sta. 15+91.80

TOWN OF
TOPSHAM, MAINE

STP-1335(310)X

WIN
13353.10

HIGHWAY PLANS

STATE OF MAINE
JOSEPH R. HOWE
No. 10420
PROFESSIONAL ENGINEER

Joseph R. Howe	SIGNATURE	
10420	P.E. NUMBER	
6/28/2016	DATE	

		BY	DATE
PROJ. MANAGER	DWB		
DESIGN-DETAILED	JRH	JJB	2/16
CHECKED-REVIEWED	JRH	DWB	2/16
DESIGN2-DETAILED2			
DESIGN3-DETAILED3			
REVISIONS 1			
REVISIONS 2			
REVISIONS 3			
REVISIONS 4			
FIELD CHANGES			

TOPSHAM
TOPSHAM TRAILS PHASE I - S

CROSS SECTIONS

SHEET NUMBER
28
OF 45

Filename: ...\msta\XS_South_Final.dgn Division: HIGHWAY Username: dbryant Date:6/28/2016

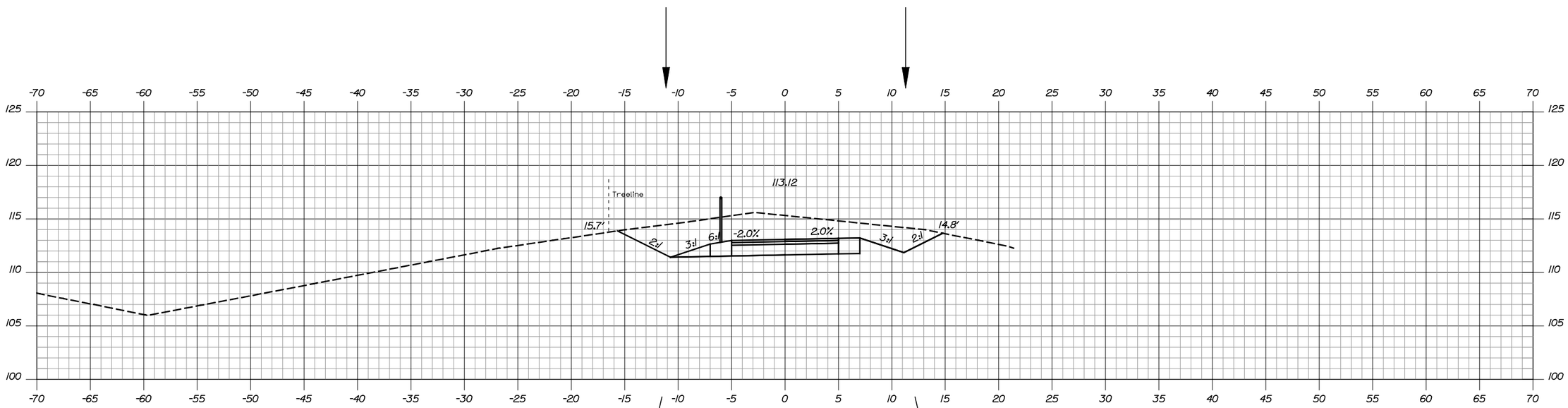

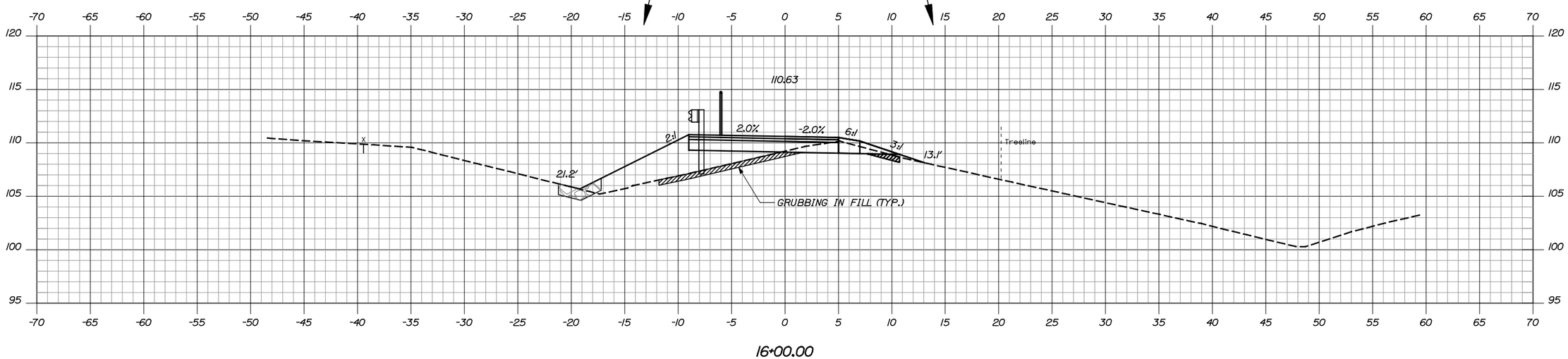

TOWN OF
TOPSHAM, MAINE

STP-1335(310)X

WIN
13353.10

HIGHWAY PLANS

STATE OF MAINE
JOSEPH R. HOWE
No. 10420
PROFESSIONAL ENGINEER

PROJ. MANAGER	DWB		
DESIGN-DETAILED	JRH	JJB	2/16
CHECKED-REVIEWED	JRH	DWB	2/16
DESIGN2-DETAILED2			
DESIGN3-DETAILED3			
REVISIONS 1			
REVISIONS 2			
REVISIONS 3			
REVISIONS 4			
FIELD CHANGES			

SIGNATURE

10420
P.E. NUMBER

6/28/2016
DATE

TOPSHAM
TOPSHAM TRAILS PHASE I - S

CROSS SECTIONS

SHEET NUMBER
29
OF 45

Sta. 16+00.00 to Sta. 16+50.00

Filename: ...\mste\XS_South_Final.dgn Division: HIGHWAY Username: dbryant Date:6/28/2016

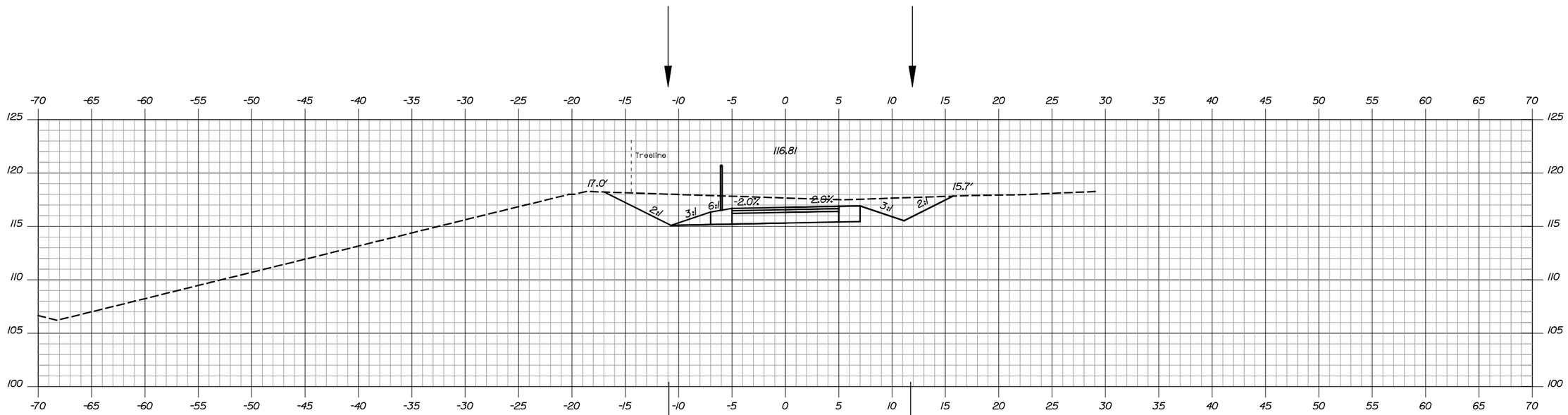

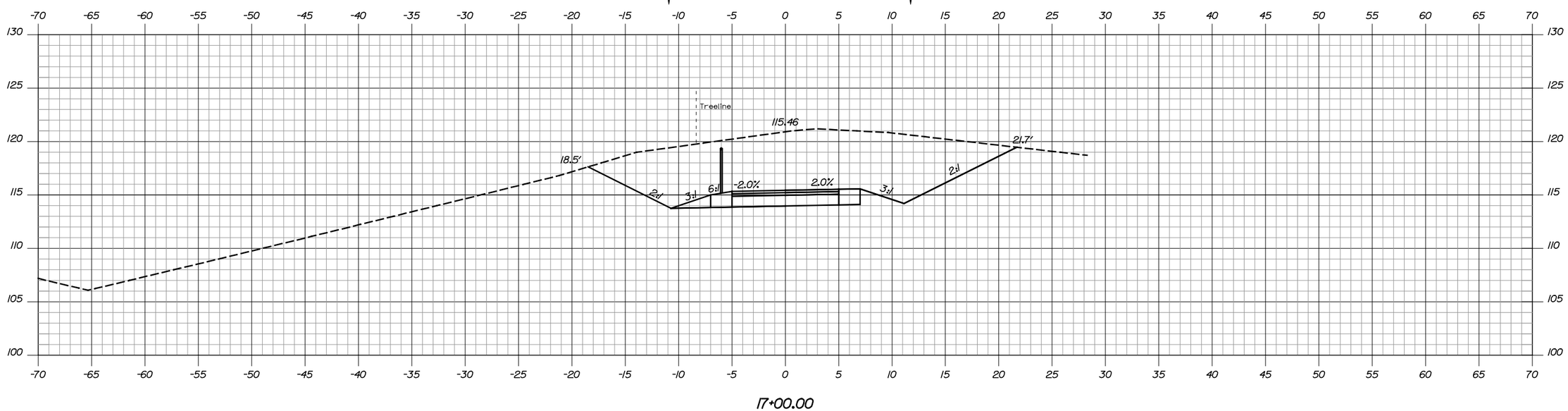

Sta. 17+00.00 to Sta. 17+50.00

TOWN OF
TOPSHAM, MAINE

STP-1335(310)X

WIN
13353.10

HIGHWAY PLANS

STATE OF MAINE
JOSEPH R. HOWE
No. 10420
PROFESSIONAL ENGINEER

Joseph R. Howe

SIGNATURE

10420
P.E. NUMBER

6/28/2016
DATE

		BY	DATE
PROJ. MANAGER	DWB		
DESIGN-DETAILED	JRH	JJB	2/16
CHECKED-REVIEWED	JRH	DWB	2/16
DESIGN2-DETAILED2			
DESIGN3-DETAILED3			
REVISIONS 1			
REVISIONS 2			
REVISIONS 3			
REVISIONS 4			
FIELD CHANGES			

TOPSHAM
TOPSHAM TRAILS PHASE I - S

CROSS SECTIONS

SHEET NUMBER
30
OF 45

Filename: ...\mnsta\XS_South_Final.dgn
Division: HIGHWAY
Username: dbryant
Date:6/28/2016

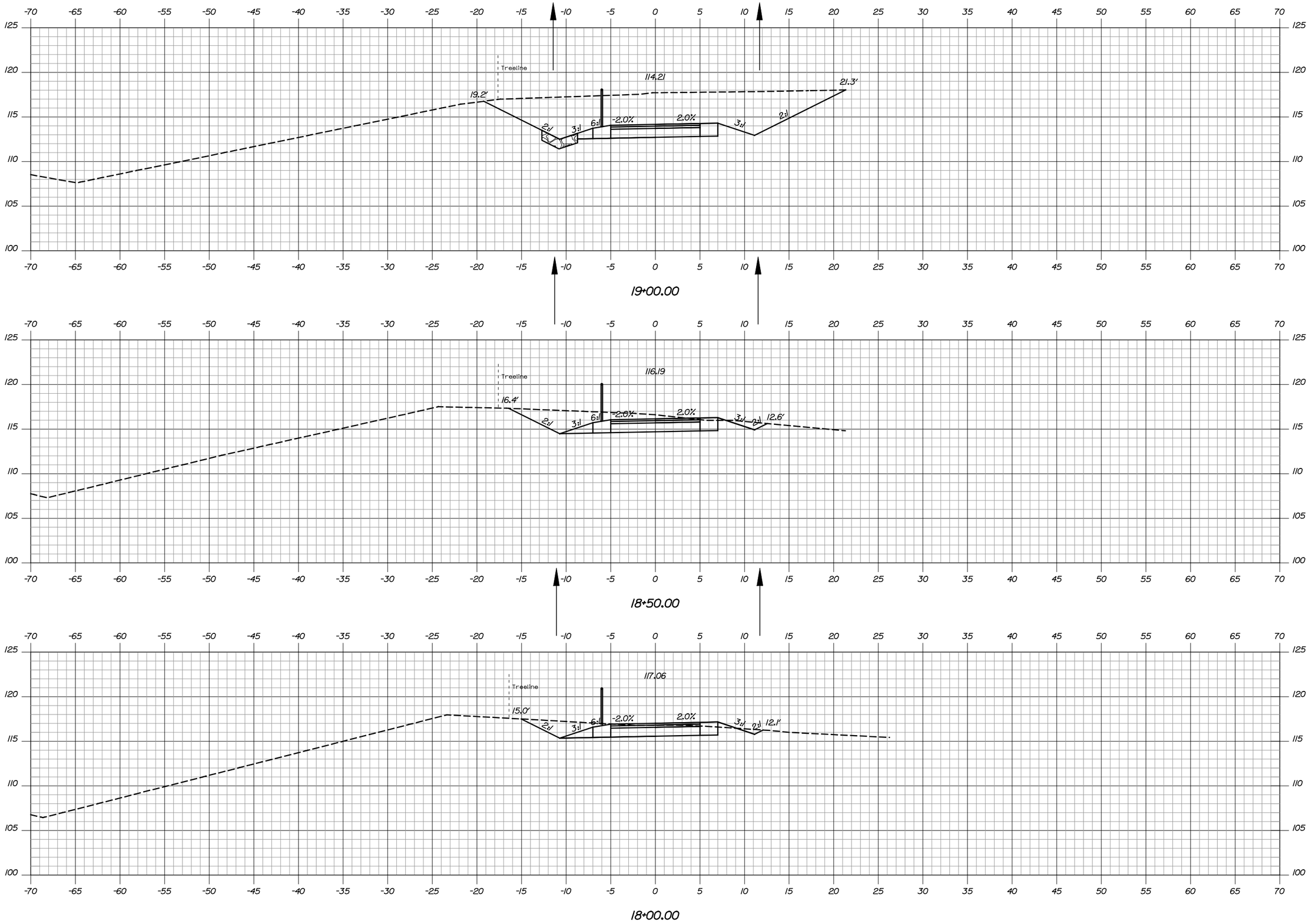

TOWN OF
TOPSHAM, MAINE

STP-1335(310)X

WIN
13353.10

HIGHWAY PLANS

STATE OF MAINE
JOSEPH R. HOWE
No. 10420
PROFESSIONAL ENGINEER

Joseph R. Howe

SIGNATURE	P.E. NUMBER	DATE
10420		6/28/2016

PROJ. MANAGER	DWB		BY	DATE
DESIGN-DETAILED	JRH		JJB	2/16
CHECKED-REVIEWED	JRH		DWB	2/16
DESIGN2-DETAILED2				
DESIGN3-DETAILED3				
REVISIONS 1				
REVISIONS 2				
REVISIONS 3				
REVISIONS 4				
FIELD CHANGES				

TOPSHAM
TOPSHAM TRAILS PHASE I - S

CROSS SECTIONS

SHEET NUMBER
31
OF 45

Sta. 18+00.00 to Sta. 19+00.00

Filename: ...\tmsta\XS_South_Final.dgn Division: HIGHWAY Username: dbryant Date:6/28/2016

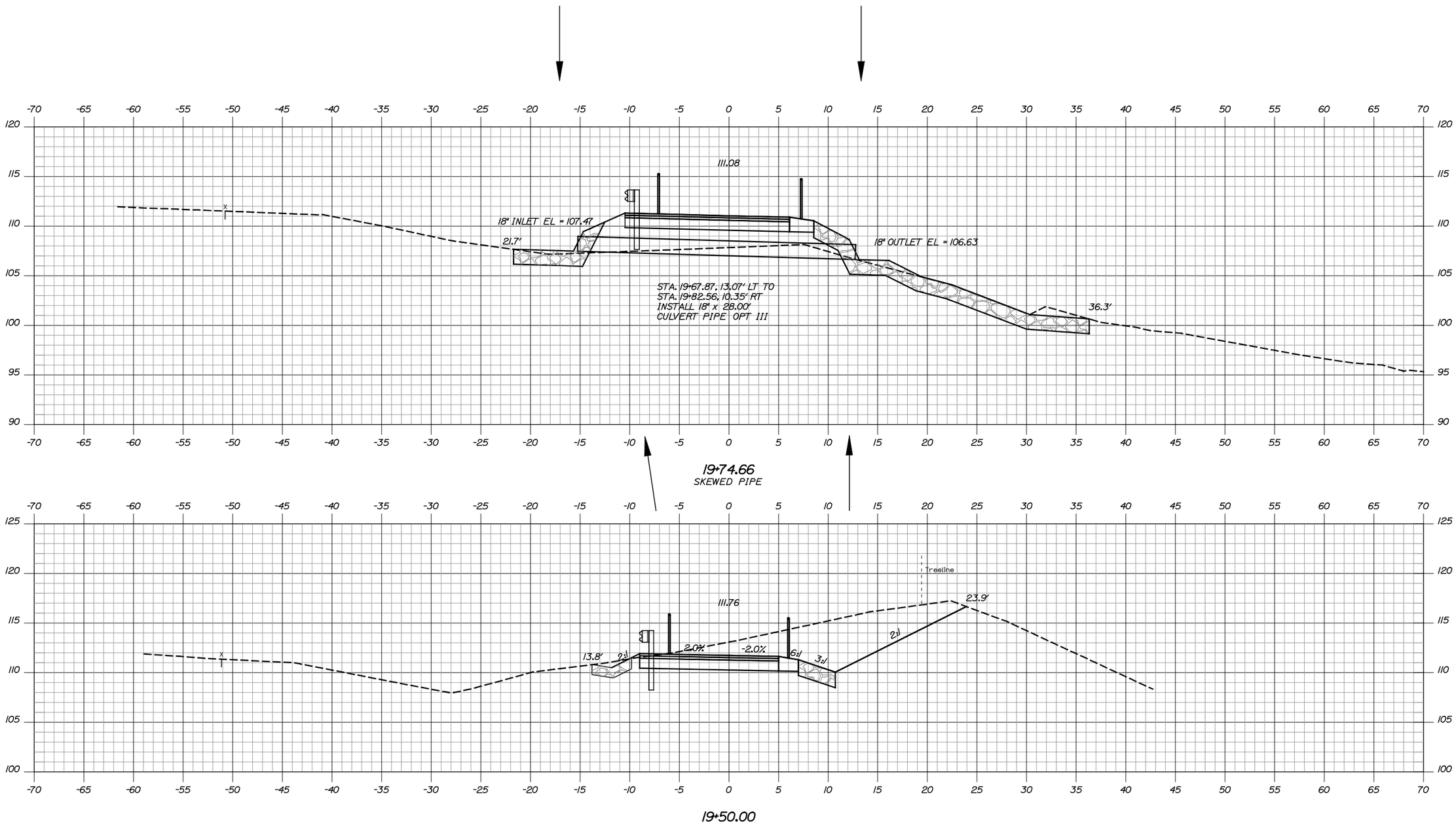

TOWN OF
TOPSHAM, MAINE

STP-1335(310)X

WIN
13353.10

HIGHWAY PLANS

STATE OF MAINE
JOSEPH R. HOWE
No. 10420
PROFESSIONAL ENGINEER

Joseph R. Howe		
SIGNATURE		
10420		
P.E. NUMBER		
6/28/2016		
DATE		

PROJ. MANAGER	DWB		
DESIGN-DETAILED	JRH	JJB	2/16
CHECKED-REVIEWED	JRH	DWB	2/16
DESIGN2-DETAILED2			
DESIGN3-DETAILED3			
REVISIONS 1			
REVISIONS 2			
REVISIONS 3			
REVISIONS 4			
FIELD CHANGES			

TOPSHAM
TOPSHAM TRAILS PHASE I - S

CROSS SECTIONS

SHEET NUMBER
32
OF 45

Sta. 19+50.00 to Sta. 19+74.66

Filename: ...\msta\XS_South_Final.dgn Division: HIGHWAY Username: dbryant Date:6/28/2016

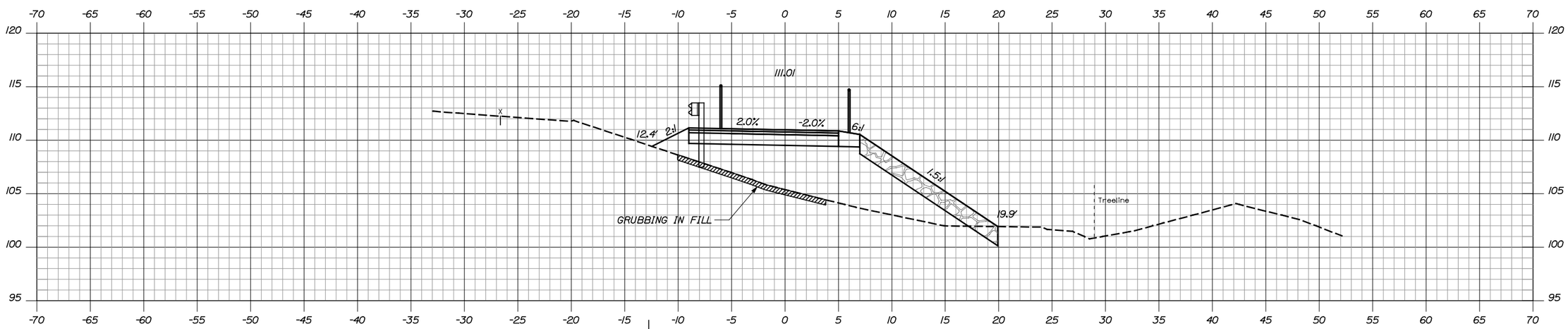

20+00.00

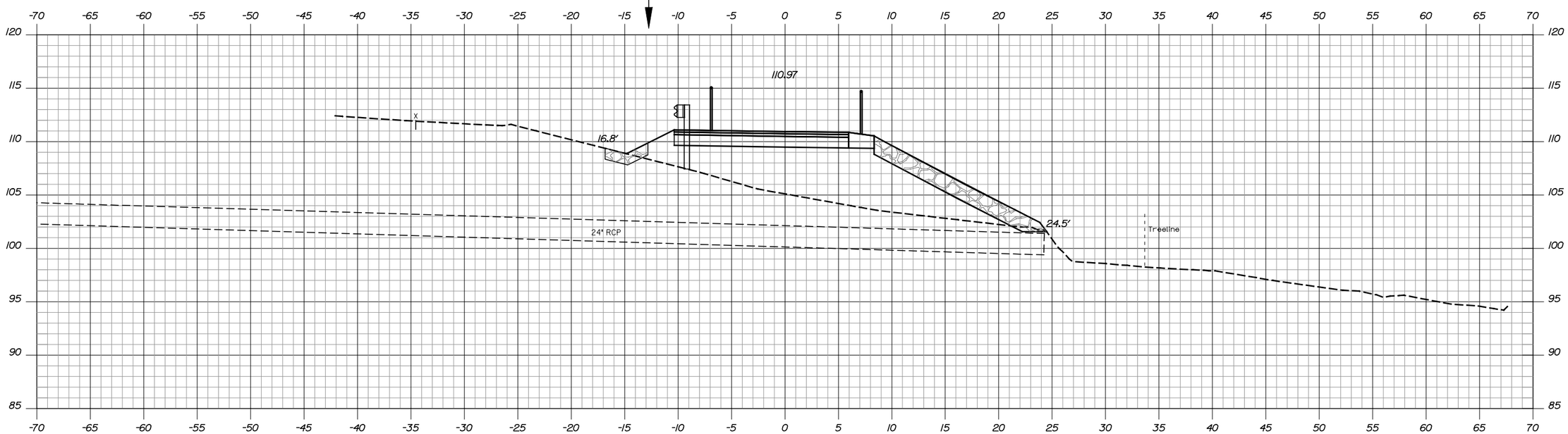

19+94.65
SKEWED PIPE

Sta. 19+94.65 to Sta. 20+00.00

TOWN OF
TOPSHAM, MAINE

STP-1335(310)X

WIN
13353.10

HIGHWAY PLANS

STATE OF MAINE
JOSEPH R. HOWE
No. 10420
PROFESSIONAL ENGINEER

Joseph R. Howe

SIGNATURE	10420
P.E. NUMBER	6/28/2016
DATE	

		BY	DATE
PROJ. MANAGER	DWB		
DESIGN-DETAILED	JRH	JJB	2/16
CHECKED-REVIEWED	JRH	DWB	2/16
DESIGN2-DETAILED2			
DESIGN3-DETAILED3			
REVISIONS 1			
REVISIONS 2			
REVISIONS 3			
REVISIONS 4			
FIELD CHANGES			

TOPSHAM
TOPSHAM TRAILS PHASE I - S

CROSS SECTIONS

SHEET NUMBER
33
OF 45

Filename: ...\msta\XS_South_Final.dgn Division: HIGHWAY Username: dbryant Date:6/28/2016

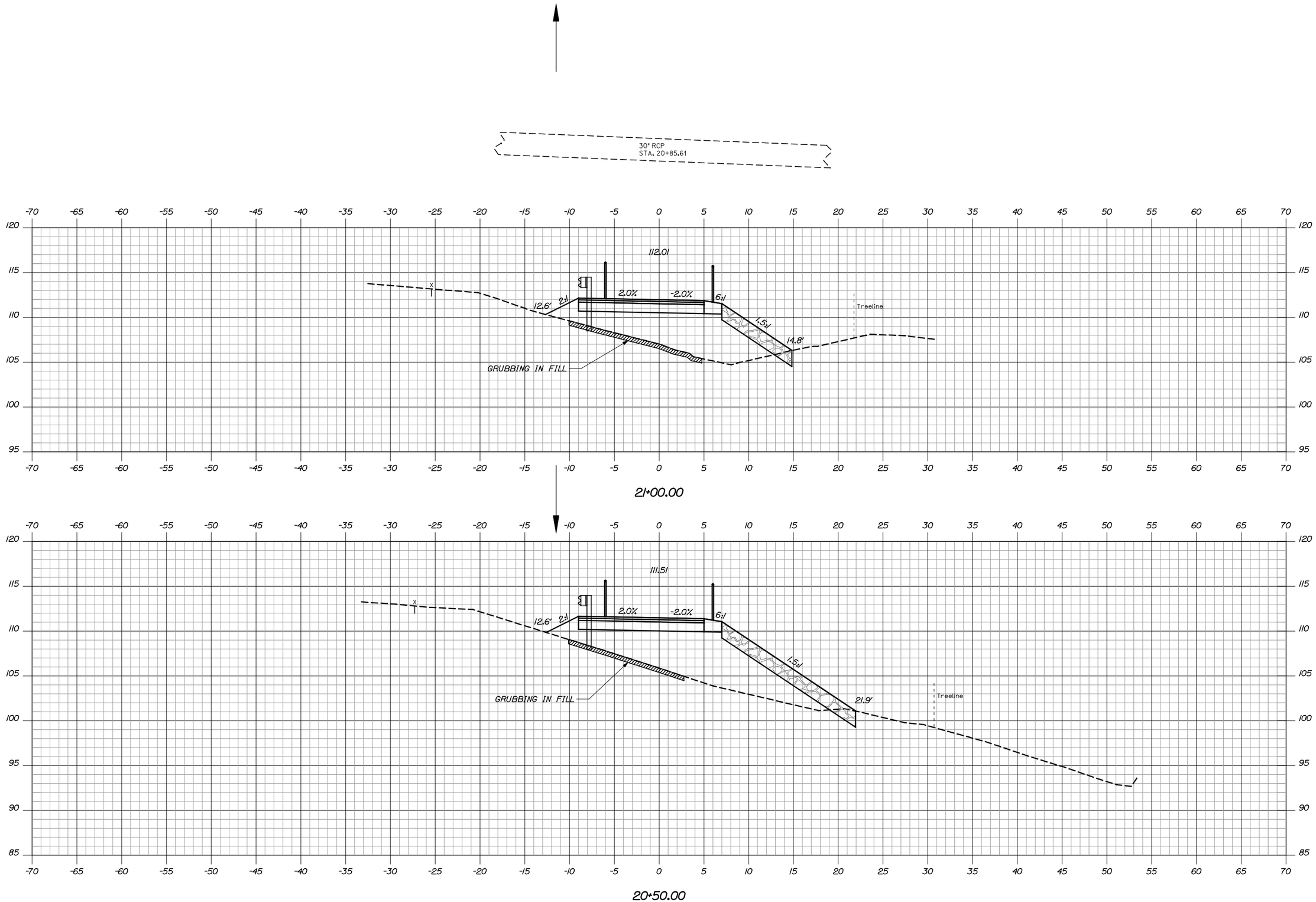

TOWN OF
TOPSHAM, MAINE

STP-1335(310)X

WIN
13353.10

HIGHWAY PLANS

STATE OF MAINE
JOSEPH R. HOWE
No. 10420
PROFESSIONAL ENGINEER

Joseph R. Howe

SIGNATURE	
10420	
P.E. NUMBER	
6/28/2016	
DATE	

		BY	DATE
PROJ. MANAGER	DWB		
DESIGN-DETAILED	JRH	JJB	2/16
CHECKED-REVIEWED	JRH	DWB	2/16
DESIGN2-DETAILED2			
DESIGN3-DETAILED3			
REVISIONS 1			
REVISIONS 2			
REVISIONS 3			
REVISIONS 4			
FIELD CHANGES			

TOPSHAM
TOPSHAM TRAILS PHASE I - S

CROSS SECTIONS

SHEET NUMBER
34
OF 45

Sta. 20+50.00 to Sta. 21+00.00

Filename: ...\msta\XS_South_Final.dgn Division: HIGHWAY Username: dbryant Date:6/28/2016

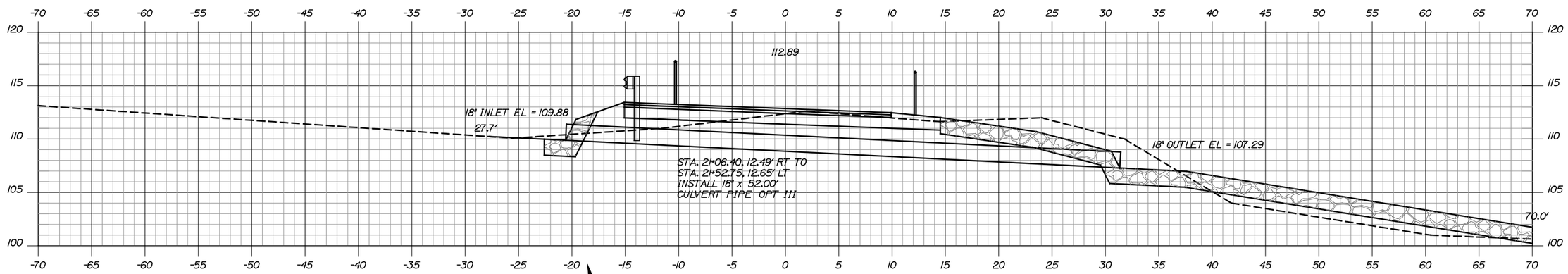

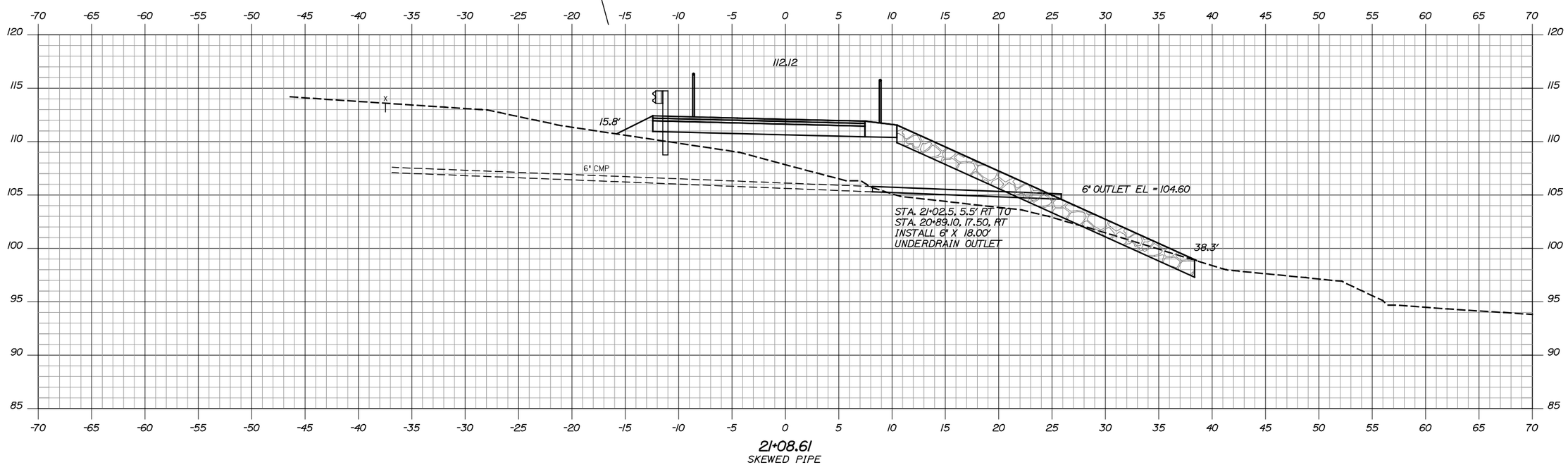

TOWN OF
TOPSHAM, MAINE

STP-1335(310)X

WIN
13353.10

HIGHWAY PLANS

STATE OF MAINE
JOSEPH R. HOWE
No. 10420
PROFESSIONAL ENGINEER

Joseph R. Howe

SIGNATURE	
10420	
P.E. NUMBER	
6/28/2016	
DATE	

		BY	DATE
PROJ. MANAGER	DWB		
DESIGN-DETAILED	JRH	JJB	2/16
CHECKED-REVIEWED	JRH	DWB	2/16
DESIGN2-DETAILED2			
DESIGN3-DETAILED3			
REVISIONS 1			
REVISIONS 2			
REVISIONS 3			
REVISIONS 4			
FIELD CHANGES			

TOPSHAM
TOPSHAM TRAILS PHASE I - S

CROSS SECTIONS

SHEET NUMBER
35
OF 45

Sta. 21+08.61 to Sta. 21+37.54

Filename: ...\msta\XS_South_Final.dgn Division: HIGHWAY Username: dbryant Date:6/28/2016

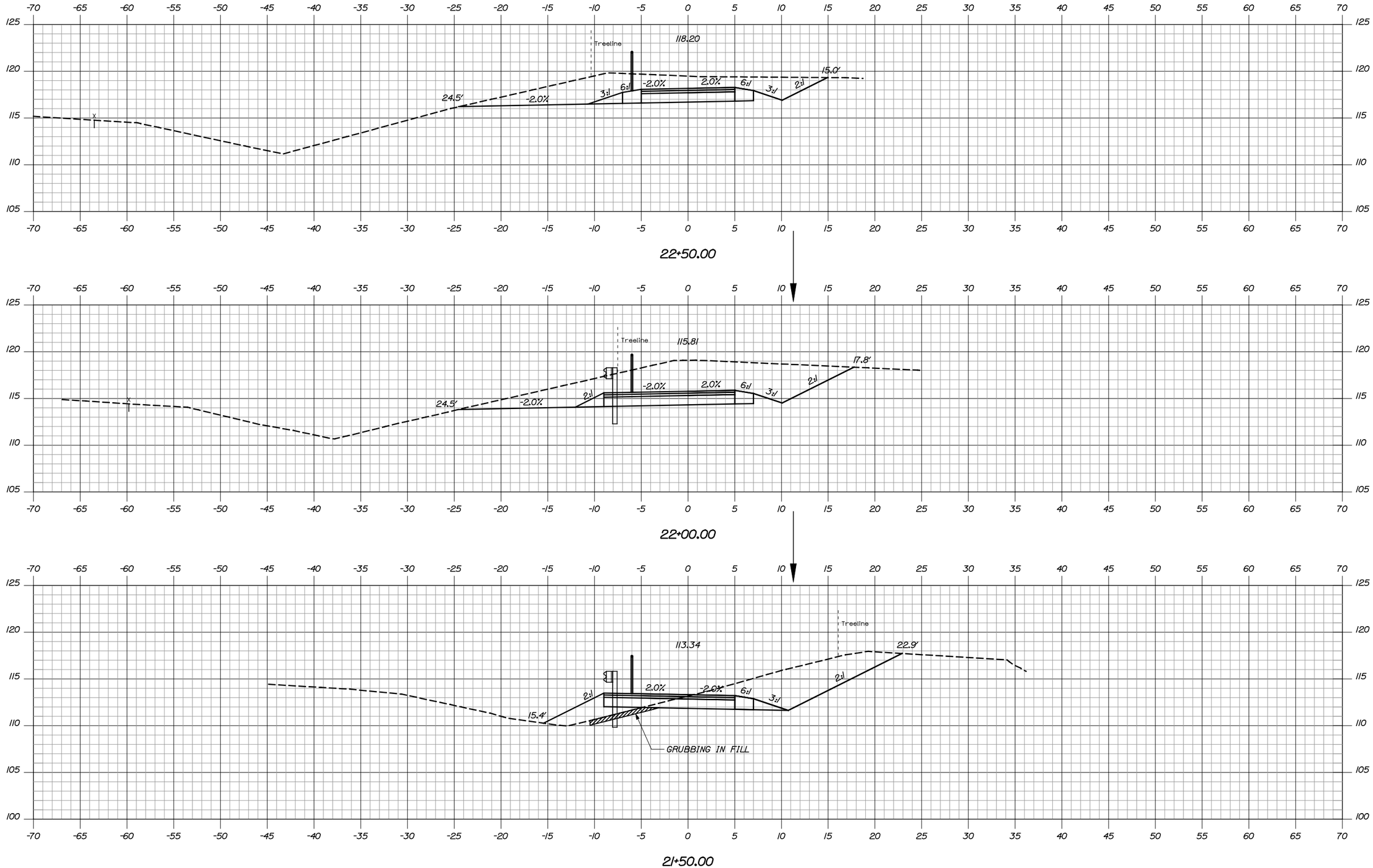

TOWN OF
TOPSHAM, MAINE

STP-1335(310)X

WIN
13353.10

HIGHWAY PLANS

STATE OF MAINE
JOSEPH R. HOWE
No. 10420
PROFESSIONAL ENGINEER

Joseph R. Howe		
SIGNATURE		
10420		
P.E. NUMBER		
6/28/2016		
DATE		

		BY	DATE
PROJ. MANAGER	DWB		
DESIGN-DETAILED	JRH	JJB	2/16
CHECKED-REVIEWED	JRH	DWB	2/16
DESIGN2-DETAILED2			
DESIGN3-DETAILED3			
REVISIONS 1			
REVISIONS 2			
REVISIONS 3			
REVISIONS 4			
FIELD CHANGES			

TOPSHAM
TOPSHAM TRAILS PHASE I - S

CROSS SECTIONS

SHEET NUMBER
36
OF 45

Sta. 21+50.00 to Sta. 22+50.00

Filename: ...\msta\XS_South_Final.dgn Division: HIGHWAY Username: dbryant Date:6/28/2016

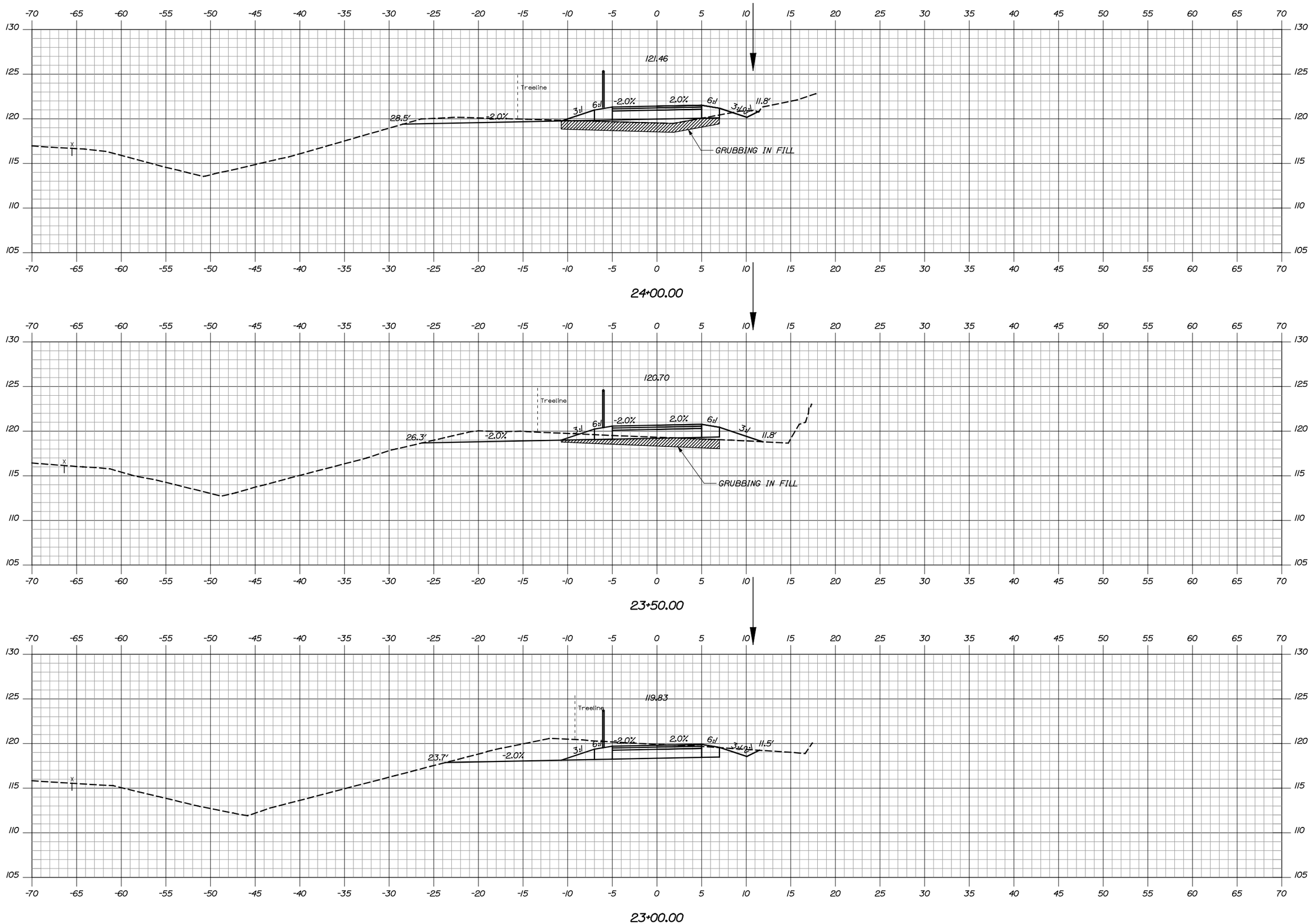

TOWN OF
TOPSHAM, MAINE

STP-1335(310)X

WIN
13353.10

HIGHWAY PLANS

STATE OF MAINE
JOSEPH R. HOWE
No. 10420
PROFESSIONAL ENGINEER

Joseph R. Howe

SIGNATURE	P.E. NUMBER	DATE
10420		6/28/2016

		BY	DATE
PROJ. MANAGER	DWB		
DESIGN-DETAILED	JRH	JJB	2/16
CHECKED-REVIEWED	JRH	DWB	2/16
DESIGN2-DETAILED2			
DESIGN3-DETAILED3			
REVISIONS 1			
REVISIONS 2			
REVISIONS 3			
REVISIONS 4			
FIELD CHANGES			

TOPSHAM
TOPSHAM TRAILS PHASE I - S

CROSS SECTIONS

SHEET NUMBER
37
OF 45

Sta. 23+00.00 to Sta. 24+00.00

Filename: ...\Vmsta\XS_South_Final.dgn Division: HIGHWAY Username: dbryant Date:6/28/2016

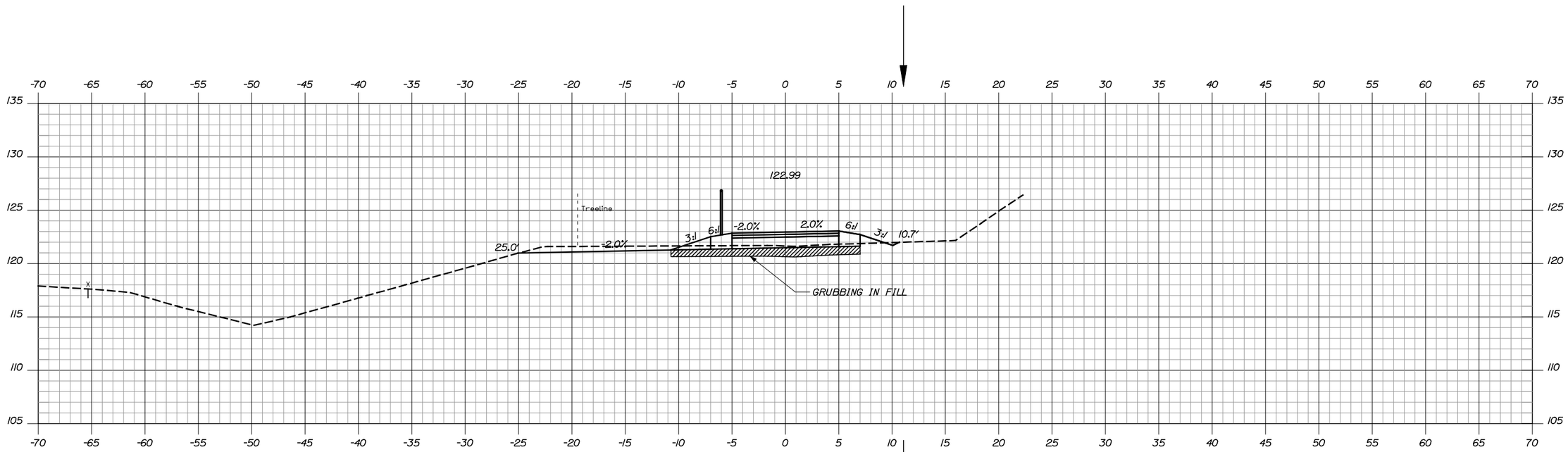

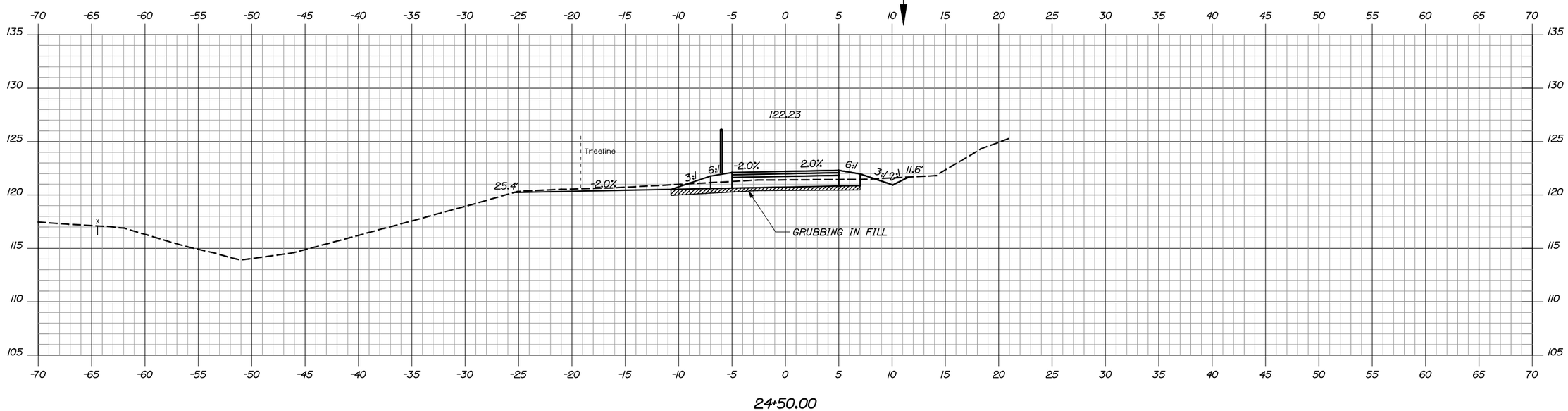

TOWN OF
TOPSHAM, MAINE

STP-1335(310)X

WIN
13353.10

HIGHWAY PLANS

STATE OF MAINE
JOSEPH R. HOWE
No. 10420
PROFESSIONAL ENGINEER

Joseph R. Howe	SIGNATURE	
10420	P.E. NUMBER	
6/28/2016	DATE	

		BY	DATE
PROJ. MANAGER	DWB		
DESIGN-DETAILED	JRH	JJB	2/16
CHECKED-REVIEWED	JRH	DWB	2/16
DESIGN2-DETAILED2			
DESIGN3-DETAILED3			
REVISIONS 1			
REVISIONS 2			
REVISIONS 3			
REVISIONS 4			
FIELD CHANGES			

TOPSHAM
TOPSHAM TRAILS PHASE I - S

CROSS SECTIONS

SHEET NUMBER
38
OF 45

Sta. 24+50.00 to Sta. 25+00.00

Filename: ...\tmsta\XS_South_Final.dgn Division: HIGHWAY Username: dbryant Date:6/28/2016

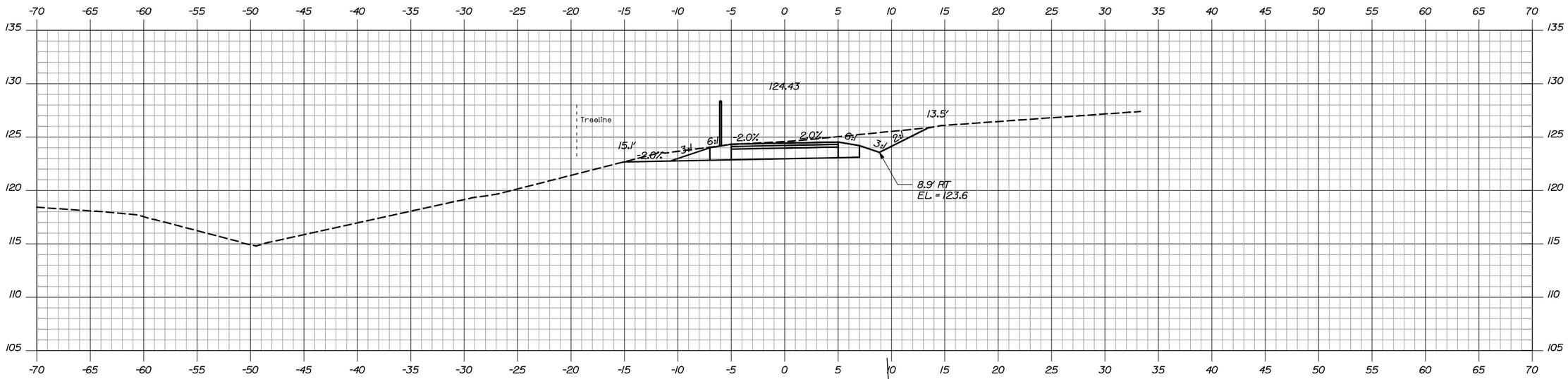

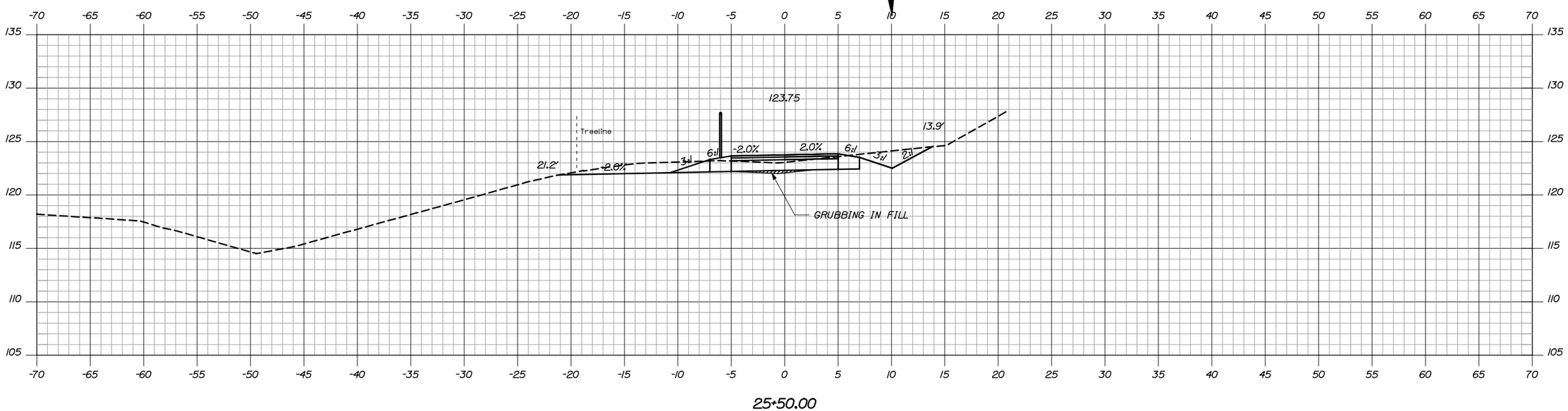

Sta. 25+50.00 to Sta. 26+00.00

TOWN OF
TOPSHAM, MAINE

STP-1335(310)X

WIN
13353.10

HIGHWAY PLANS

STATE OF MAINE
JOSEPH R. HOWE
No. 10420
PROFESSIONAL ENGINEER

SIGNATURE	
10420	
P.E. NUMBER	
6/28/2016	
DATE	

PROJ. MANAGER	DWB	
DESIGN-DETAILED	BY	DATE
CHECKED-REVIEWED		
DESIGN2-DETAILED2		
DESIGN3-DETAILED3		
REVISIONS 1		
REVISIONS 2		
REVISIONS 3		
REVISIONS 4		
FIELD CHANGES		

TOPSHAM
TOPSHAM TRAILS PHASE I - S

CROSS SECTIONS

SHEET NUMBER
39
OF 45

Filename: ...\mste\XS_South_R_3_1.dgn Division: HIGHWAY Username: dbryant Date:6/28/2016

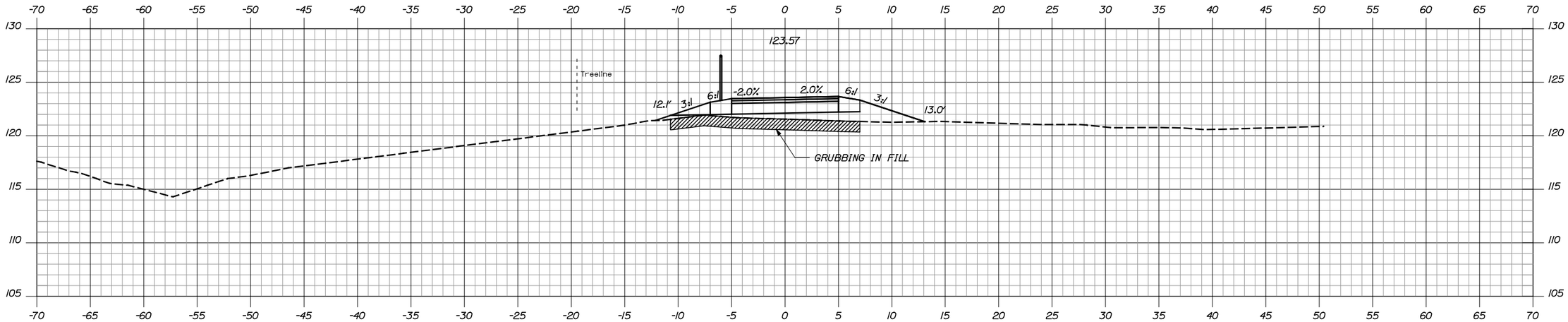

27+50.00

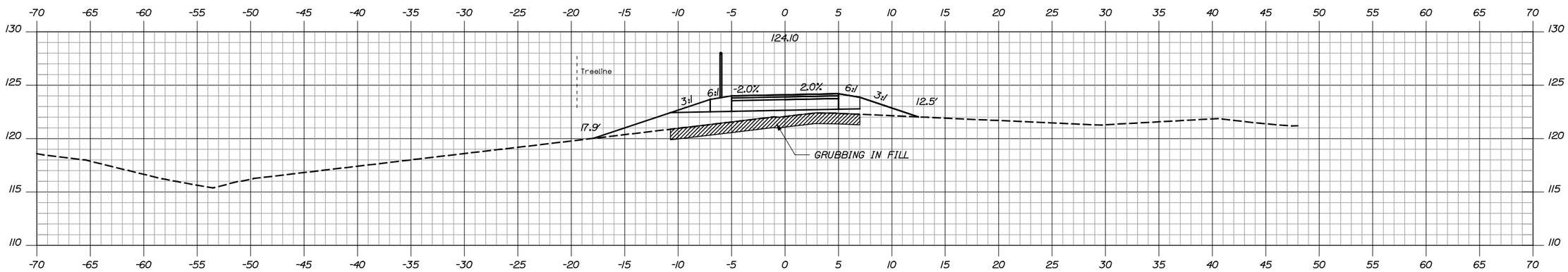

27+00.00

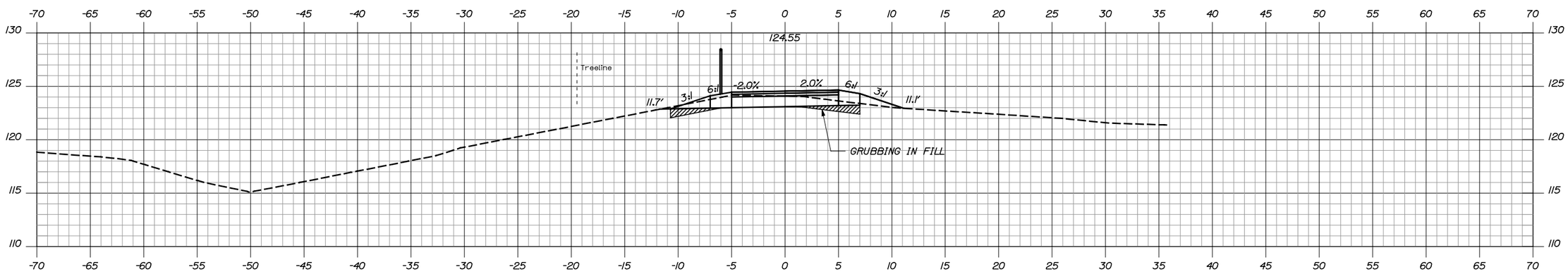

26+50.00

Date:6/28/2016

Username: dbryant

Division: HIGHWAY

Filename: ...\msta\XS_South_R_3_1.dgn

TOWN OF
TOPSHAM, MAINE

STP-1335(310)X

WIN
13353.10

HIGHWAY PLANS

STATE OF MAINE
JOSEPH R. HOWE
No. 10420
PROFESSIONAL ENGINEER

SIGNATURE	Joseph R. Howe
P.E. NUMBER	10420
DATE	6/28/2016

	BY	DATE
PROJ. MANAGER	DWB	
DESIGN-DETAILED		
CHECKED-REVIEWED		
DESIGN2-DETAILED2		
DESIGN3-DETAILED3		
REVISIONS 1		
REVISIONS 2		
REVISIONS 3		
REVISIONS 4		
FIELD CHANGES		

TOPSHAM
TOPSHAM TRAILS PHASE I - S

CROSS SECTIONS

SHEET NUMBER
40
OF 45

Sta. 26+50.00 to Sta. 27+50.00

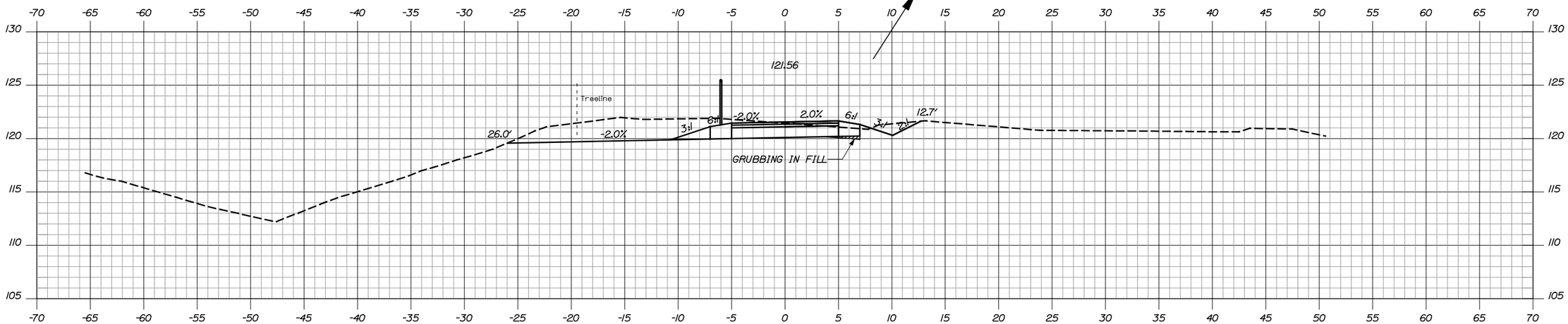

29+00.00

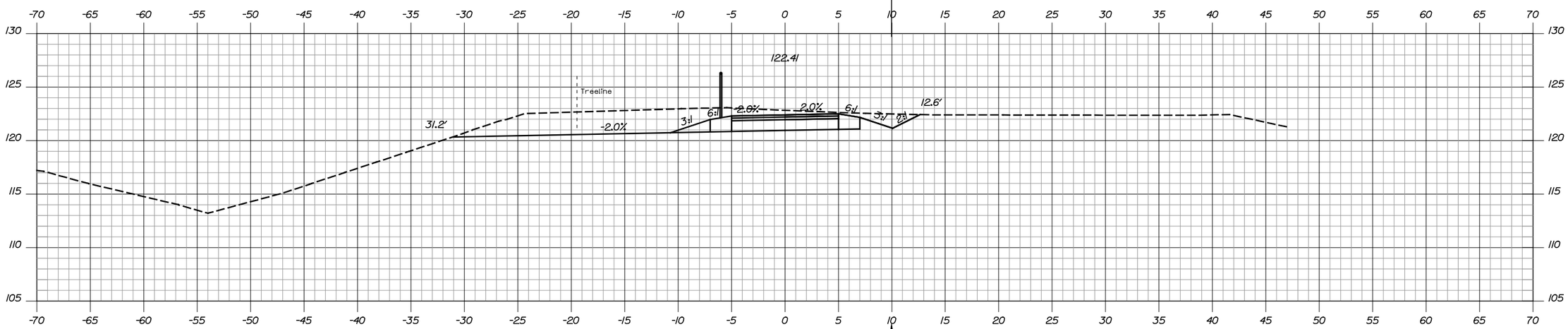

28+50.00

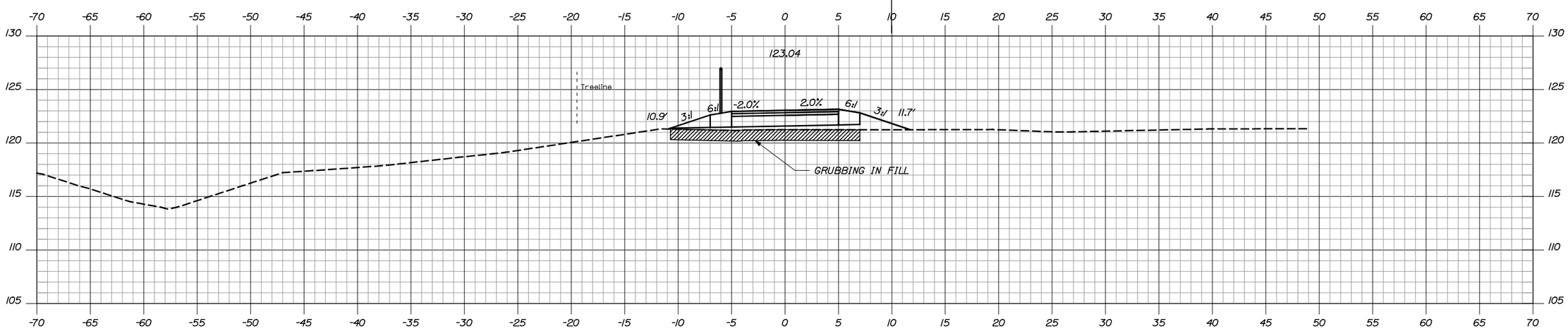

28+00.00

TOWN OF
TOPSHAM, MAINE

STP-1335(310)X

WIN
13353.10

HIGHWAY PLANS

STATE OF MAINE
JOSEPH R. HOWE
No. 10420
PROFESSIONAL ENGINEER

Joseph R. Howe		
SIGNATURE		
10420		
P.E. NUMBER		
6/28/2016		
DATE		

PROJ. MANAGER	DWB	
DESIGN-DETAILED	BY	DATE
CHECKED-REVIEWED		
DESIGN2-DETAILED2		
DESIGN3-DETAILED3		
REVISIONS 1		
REVISIONS 2		
REVISIONS 3		
REVISIONS 4		
FIELD CHANGES		

TOPSHAM
TOPSHAM TRAILS PHASE I - S

CROSS SECTIONS

SHEET NUMBER
41
OF 45

Sta. 28+00.00 to Sta. 29+00.00

Filename: ...\mste\XS_South_R_3_1.dgn Division: HIGHWAY Username: dbryant Date:6/28/2016

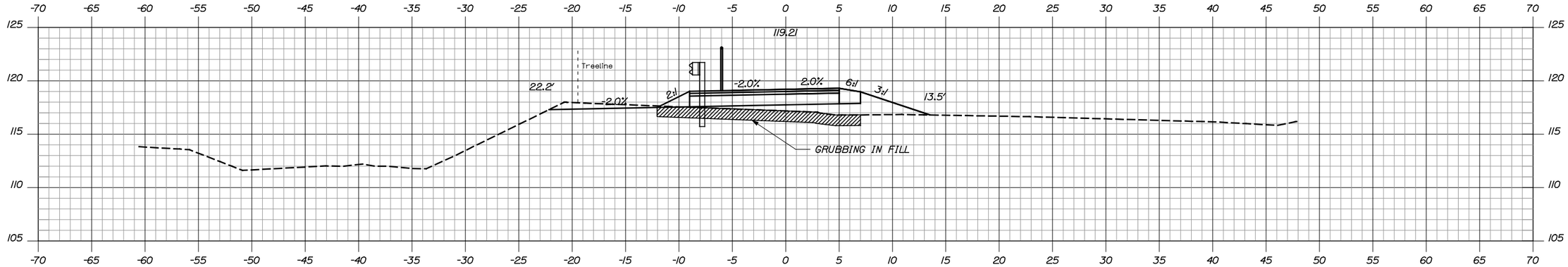

30+50.00

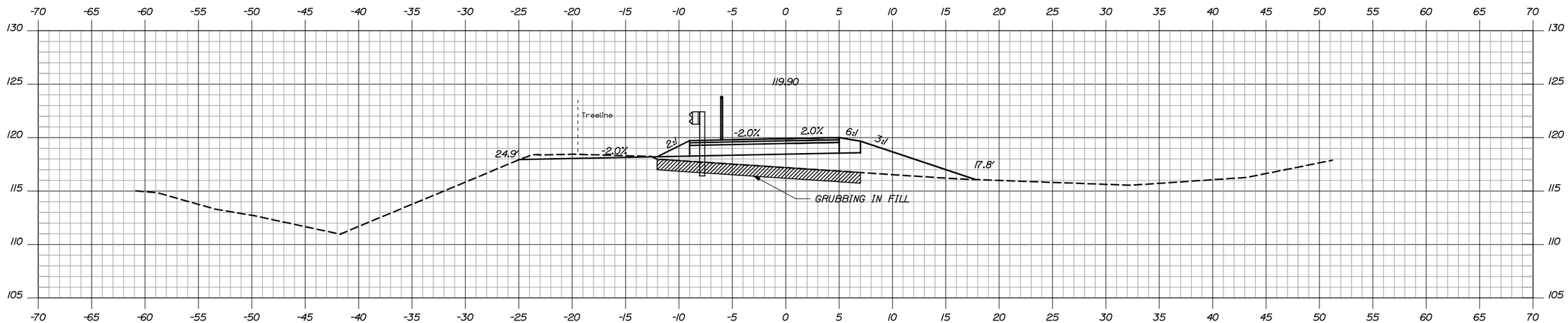

30+00.00

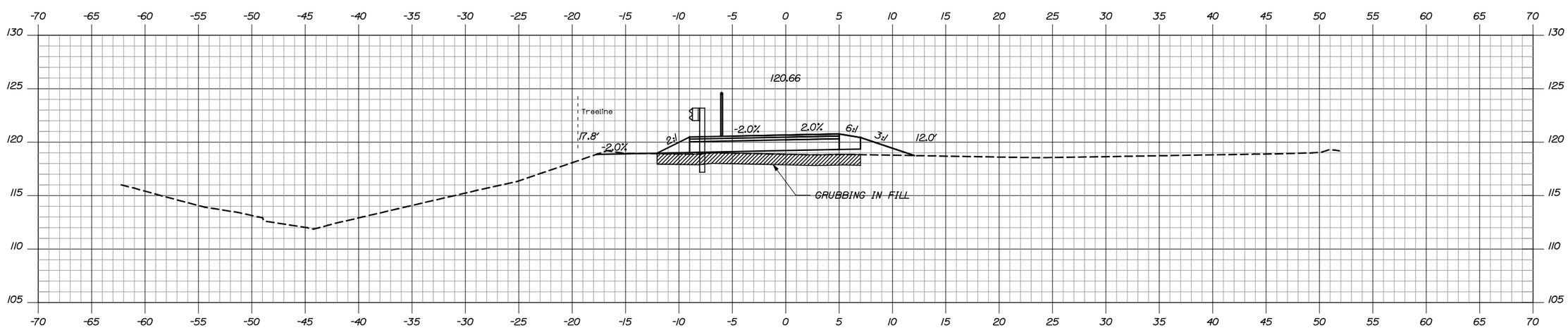

29+50.00

TOWN OF
TOPSHAM, MAINE

STP-1335(310)X

WIN
13353.10

HIGHWAY PLANS

STATE OF MAINE
JOSEPH R. HOWE
No. 10420
PROFESSIONAL ENGINEER

	SIGNATURE	
	10420	
	P.E. NUMBER	
	6/28/2016	
	DATE	

PROJ. MANAGER	DWB		
DESIGN-DETAILED		BY	DATE
CHECKED-REVIEWED			
DESIGN2-DETAILED2			
DESIGN3-DETAILED3			
REVISIONS 1			
REVISIONS 2			
REVISIONS 3			
REVISIONS 4			
FIELD CHANGES			

TOPSHAM
TOPSHAM TRAILS PHASE I - S

CROSS SECTIONS

SHEET NUMBER
42
OF 45

Sta. 29+50.00 to Sta. 30+50.00

Filename: ...\msta\XS_South_R_3_1.dgn Division: HIGHWAY Username: dbryant Date:6/28/2016

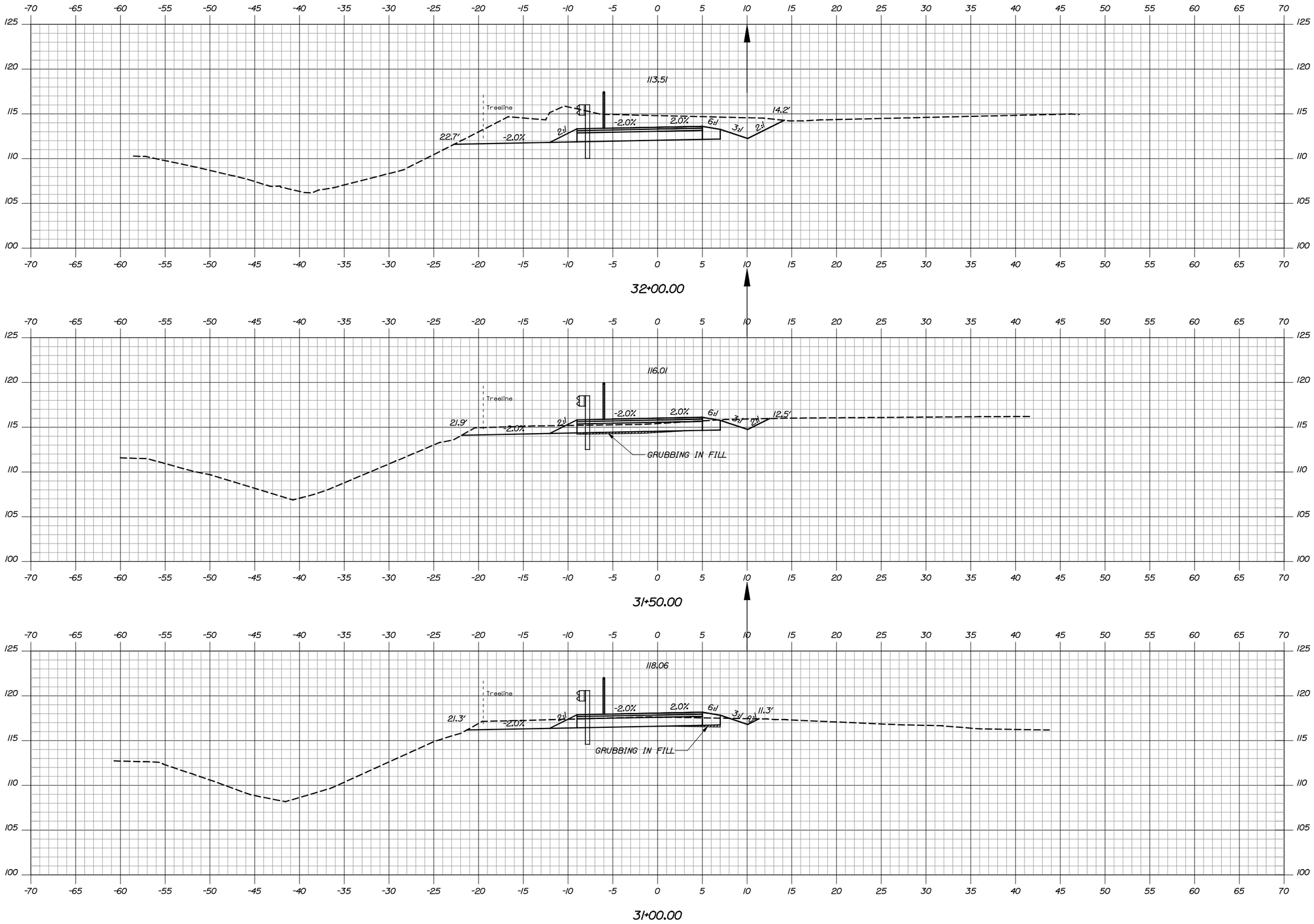

TOWN OF
TOPSHAM, MAINE

STP-1335(310)X

WIN
13353.10

HIGHWAY PLANS

STATE OF MAINE
JOSEPH R. HOWE
No. 10420
PROFESSIONAL ENGINEER

Joseph R. Howe		
SIGNATURE		
10420		
P.E. NUMBER		
6/28/2016		
DATE		

		BY	DATE
PROJ. MANAGER	DWB		
DESIGN-DETAILED			
CHECKED-REVIEWED			
DESIGN2-DETAILED2			
DESIGN3-DETAILED3			
REVISIONS 1			
REVISIONS 2			
REVISIONS 3			
REVISIONS 4			
FIELD CHANGES			

TOPSHAM
TOPSHAM TRAILS PHASE I - S

CROSS SECTIONS

SHEET NUMBER
43
OF 45

Sta. 31+00.00 to Sta. 32+00.00

Filename: ...\mste\XS_South_R_3_1.dgn Division: HIGHWAY Username: dbryant Date:6/28/2016

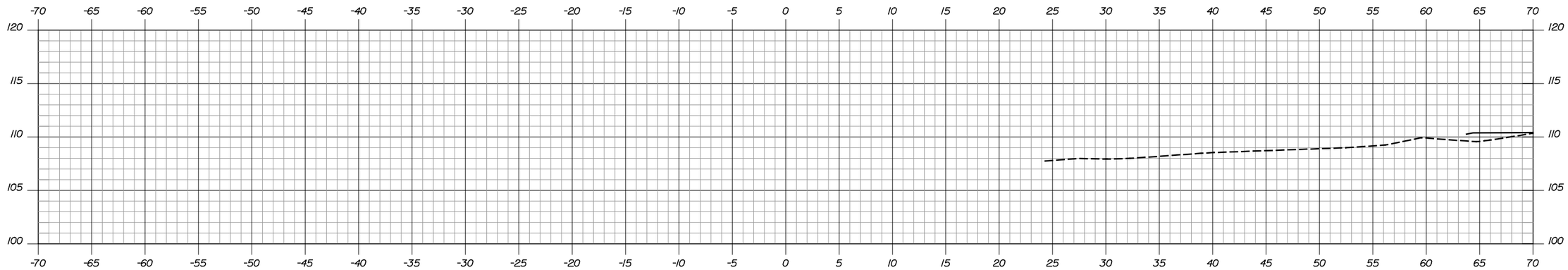

33+50.00

STA. 33+31.90
LIMIT OF WORK

STA. 33+28.29
END PROJECT STP-1335(310)X

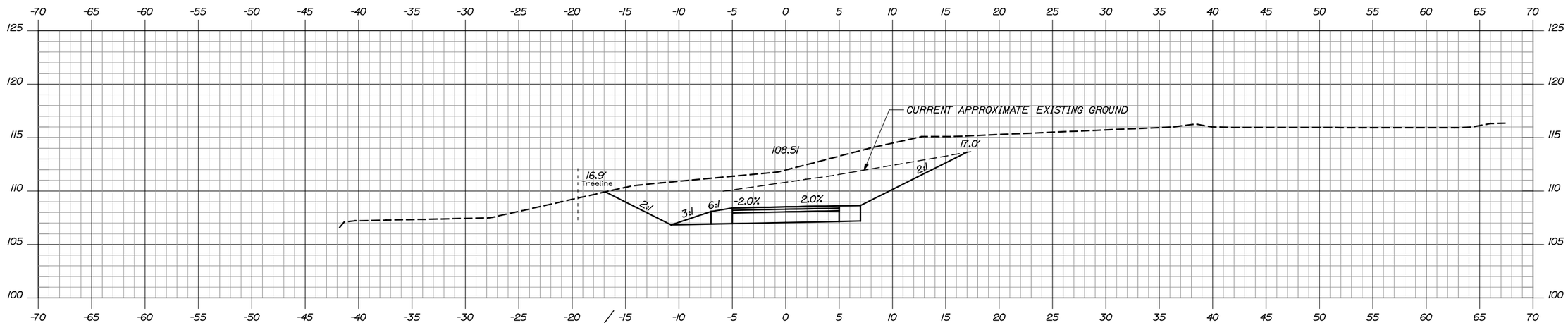

33+00.00

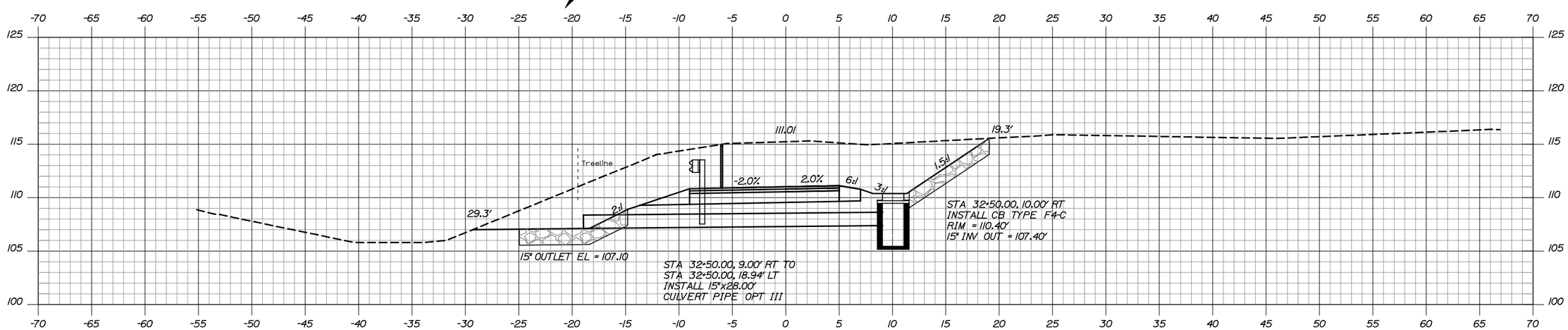

32+50.00

TOWN OF
TOPSHAM, MAINE

STP-1335(310)X

WIN
13353.10

HIGHWAY PLANS

STATE OF MAINE
JOSEPH R. HOWE
No. 10420
PROFESSIONAL ENGINEER

SIGNATURE	
P.E. NUMBER	10420
DATE	6/28/2016

	BY	DATE
PROJ. MANAGER DWB		
DESIGN-DETAILED		
CHECKED-REVIEWED		
DESIGN2-DETAILED2		
DESIGN3-DETAILED3		
REVISIONS 1		
REVISIONS 2		
REVISIONS 3		
REVISIONS 4		
FIELD CHANGES		

TOPSHAM
TOPSHAM TRAILS PHASE I - S

CROSS SECTIONS

SHEET NUMBER
44
OF 45

Sta. 32+50.00 to Sta. 33+50.00

Filename: ...\msta\XS_South_R_3_1.dgn Division: HIGHWAY Username: dbryant Date:6/28/2016

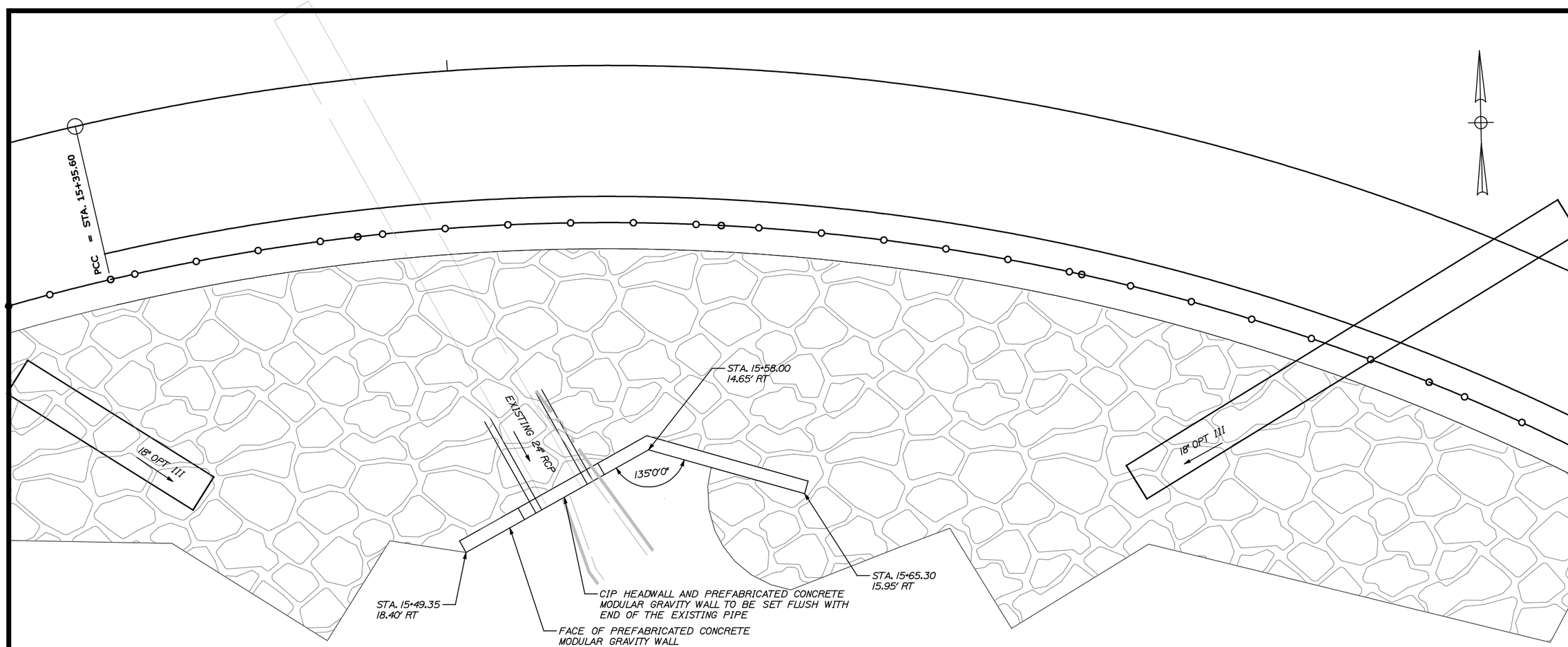

RETAINING WALL PLAN

SCALE: 1" = 2'

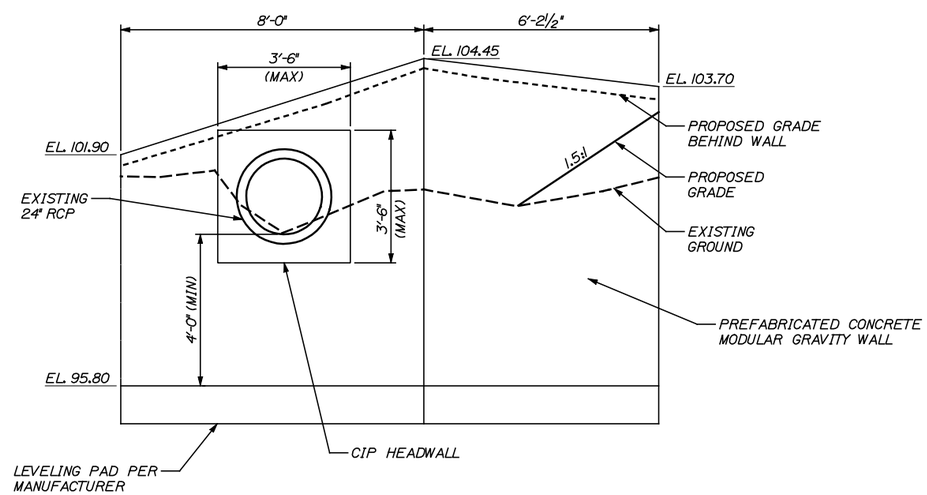

RETAINING WALL ELEVATION

SCALE: 1" = 2'

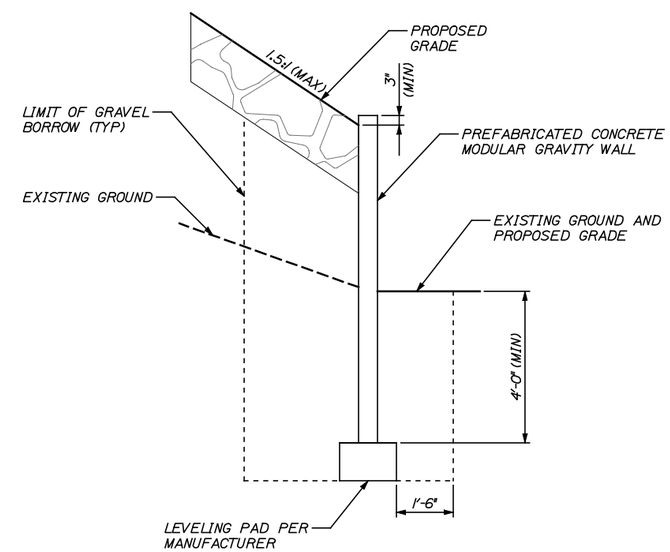

TYPICAL RETAINING WALL SECTION

SCALE: 1" = 2'

NOTES:

1. CIP HEADWALL SHALL THE SAME THICKNESS AS THE WALL FACE, BE UNREINFORCED, AND CONFORM TO THE REQUIREMENTS OF SECTION 502 FOR CONCRETE, CLASS FILL. PAYMENT WILL BE INCIDENTAL TO ITEM 674.10 - PREFABRICATED CONCRETE MODULAR GRAVITY WALL.
2. ALLOWABLE FACTORED BEARING PRESSURE IS 3.0 KSF.
3. ALL PROVIDED GEOMETRY IS HORIZONTAL ALONG THE FRONT FACE OF WALL, UNLESS OTHERWISE NOTED.
4. GRAVEL BORROW BACKFILL SHALL BE PLACED A MINIMUM DISTANCE OF 5 FT BEHIND THE BACK OF WALL OR 1 FT BEYOND THE LIMITS OF SOIL REINFORCEMENT OR ANCHORAGE DEVICES, IF APPLICABLE.
5. THE CONTRACTOR SHALL BRACE THE EXISTING PIPE DURING EXCAVATION AND SHALL BE LIABLE FOR ANY DAMAGE CAUSED TO THE EXISTING PIPE.
6. ANY PORTION OF THE STREAM BED OR STREAM BANK DISTURBED TO CONSTRUCT THE WALL SHALL BE RECONCTRUCTED WITH NATIVE MATERIALS STOCKPILED DURING WALL CONSTRUCTION.

TOWN OF
TOPSHAM, MAINE

STP-1335(310)X

WIN
13353.10

HIGHWAY PLANS

STATE OF MAINE
JOSEPH R. HOWE
No. 10420
PROFESSIONAL ENGINEER

Joseph R. Howe

SIGNATURE		
10420		
P.E. NUMBER		
6/28/2016		
DATE		

		BY	DATE
PROJ. MANAGER	DWB		
DESIGN-DETAILED	JRH	JRH	5 /16
CHECKED-REVIEWED	DWB2	JKO	5 /16
DESIGN2-DETAILED2			
DESIGN3-DETAILED3			
REVISIONS 1			
REVISIONS 2			
REVISIONS 3			
REVISIONS 4			
FIELD CHANGES			

TOPSHAM
TOPSHAM TRAILS PHASE I - S

RETAINING WALL DETAILS

SHEET NUMBER
45
OF 45

Filename: ...\highway\msta\WallLayout.dgn Division: HIGHWAY Username: dbryant Date:6/28/2016